14.50 Gross Torque 305 CC

Bore 3.12 in. (79.2 mm)
Stroke 2.44 in. (61.9 mm)
Oil Capacity 26-28 fl. oz. (0.77 - 0.83 L)

Features:

- **Dura-Bore™ cast iron cylinder sleeve for extended life**
- **Maintenance-free Magnetron® electronic ignition for quick, dependable starts**
- **Dual-Clean™ air cleaner pleated paper filter with a foam pre-cleaner ensures maximum protection for extended engine life**
- **Overhead valve design (OHV) for cooler operation and longer valve life**
- **Buyer protection package provides two-year consumer engine warranty**

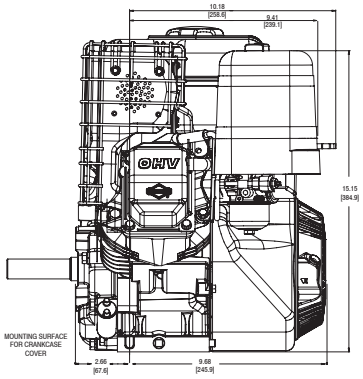

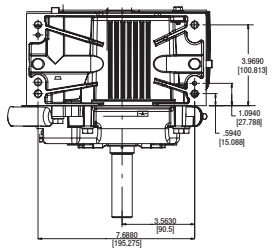

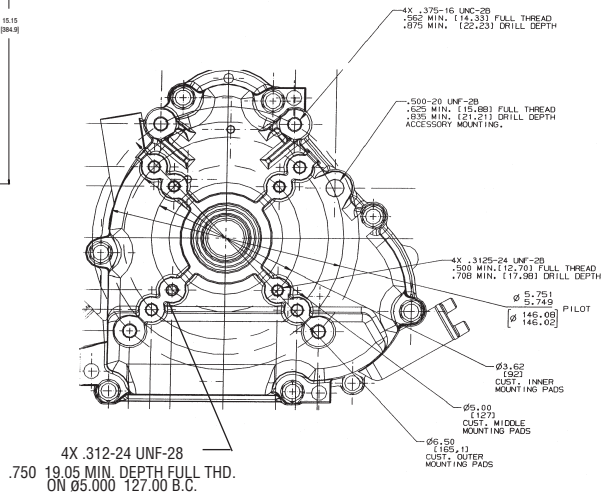

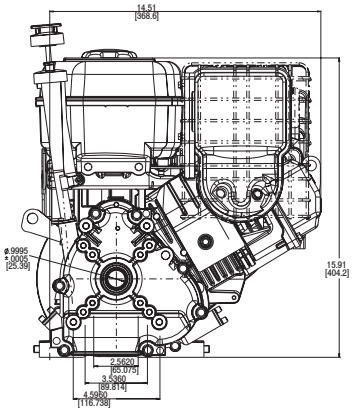

To make the center line of crankshaft the same as 190000 and 250000 Model Series, order 695154 spacer kit.

Model Type	Shipping Weight	Crankshaft	Crankshaft (P.T.O.) Extension	Dimension	Starter Position Bolt-On/Changeable	Governor	Controls	Flange Mtg.	Manual Choke	Remote Stop Switch	Oil Gard	Fuel Tank (Quarts)	Top Governor Speed	Notes
205432														
0535	52	695818	Threaded 1-14, 1” tapped length	3-21/32(c)	10:30	M	AG/R/MF	X	X	X		4	3600	•
0536	52	695369	1” dia., Keyway, tapped 3/8-24	2-29/32(c)	10:30	M	AG/R/MF	X	X	X		4	3600	•
0537	54	695462	1” dia., Keyway, tapped 7/16-20	3-21/32(c)	10:30	M	AG/R/MF	X	X	X	X	4	3600	• ⊟
0538	63	694678	Tapered, tapped 5/16-24	4-11/32(c)	10:30	M	AG/R/MF	X	X	X		4	3750	•
0563	65	696412	3/4” dia., 3/16 Keyway, tapped 3/8-24	2-21/32(c)	10:30	M	AG/R/MF	X	X	X		4	3600	•
205437														
0533	69	696412	3/4” dia., 3/16 Keyway, tapped 3/8-24	2-21/32(c)	10:30	M	AG/R/MF	X	X	X		4	3600	• ▱
0541	71	695369	1” dia., Keyway, tapped 3/8-24	2-29/32(c)	10:30	M	AG/R/MF	X	X	X		4	3600	• ◆
0542	62	695462	1” dia., Keyway, tapped 7/16-20	3-21/32(c)	10:30	M	AG/R/MF	X	X	X	X	4	3600	• ◆ ⊟
205452														
0549	65	695817	6 to 1 gear reduction ccw rotation gear shaft, 1” dia Keyway	3-1/8(a)	10:30	M	AG/R/MF		X	X		4	3600	
205457														
0550	84	695817	6 to 1 gear reduction ccw rotation gear shaft, 1” dia Keyway	3-1/8(a)	10:30	M	AG/R/MF		X	X		4	3600	◆

◆ Engine equipped with *12 Volt Gear Drive Starter and 10 Amp DC Alternator with Starter Panel Assembly.*
▱ Engine equipped with *12 Volt Gear Drive Starter and 3 Amp DC Alternator.* ⊟ DU bearing Magneto Side • Ball bearing PTO