23 HP VANGUARD™
Model Series 380700

Displacement 38.26 cu. in. (627 cc)

Bore 2.97 in. (76 mm)

Stroke 2.75 in. (70 mm)

Oil Capacity 48 fl. oz. (1.42 l) w/o Filter
56 fl. oz. (1.66 l) w/Filter

BRIGGS & STRATTON
COMMERCIAL POWER

Features:

- Dura-Bore™ cast iron cylinder sleeve for extended life
- Dependable float feed type carburetor with integral fuel pump for remote mount fuel tank
- Maintenance-free Magnetron® electronic ignition for quick, dependable starts
- Dual-Clean™ air cleaner pleated paper filter with a foam pre-cleaner ensures maximum protection for extended engine life
- Full pressure lubrication with oil cooler and spin-on oil filter assures controlled lubrication for extended component life
- Overhead valve design (OHV) for cooler operation and longer valve life
- Buyer protection package provides two-year commercial engine warranty

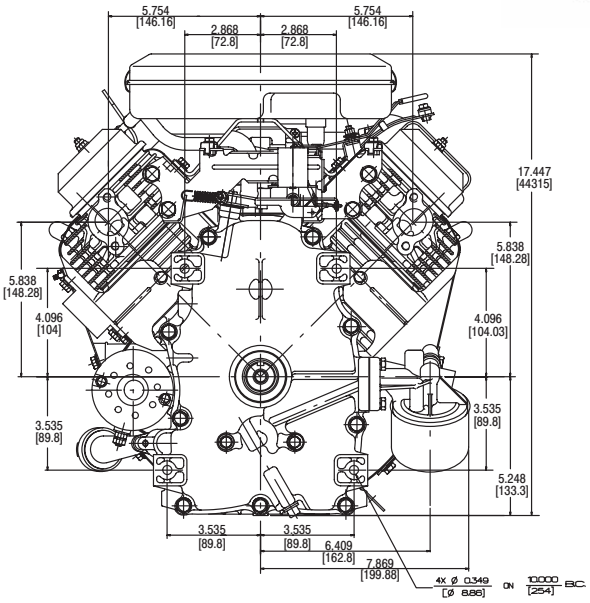

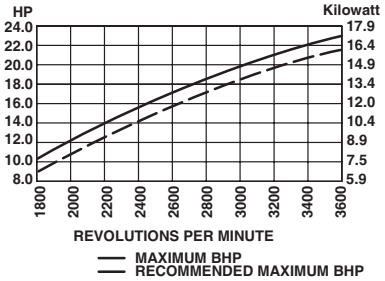

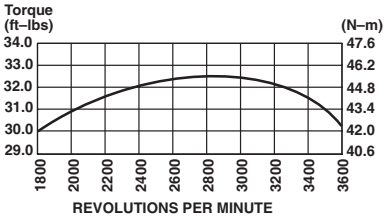

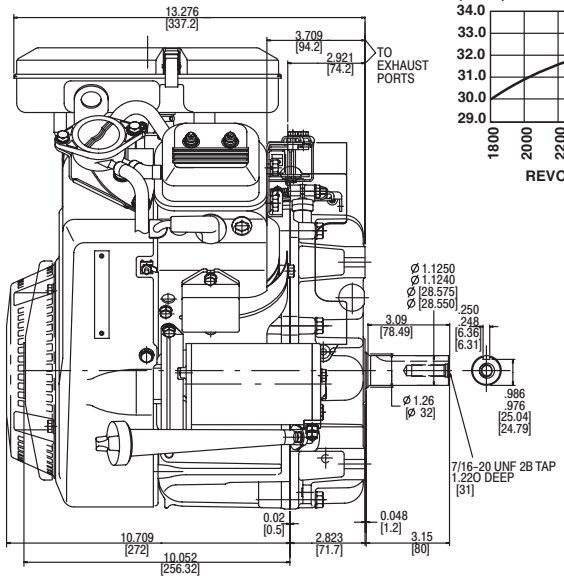

See Engine Accessories & Products Catalog Form MS-3880 for Exhaust Manifold and Muffler Options.

Model Type	Shipping Weight	Crankshaft	Crankshaft (P.T.O.) Extension	Dimension	Starter Position Bolt-On/Changeable	Governor	Controls	Exhaust System	Fuel Tank (Quarts)	Ground Wire Terminal	Ext. Oil Fill & Dipstick	Oil Pump w/Filter	Remote Choke	Top Governor Speed	Notes
380777															
0024	83	808675	Tapped 7/16-20, Keyway, 1-1/8" dia.	3-5/32(b)		M	R	•	■	X	X	X	X	3600	†
0036	82	692172	Tapped 7/16-20, Keyway, 1" dia.	3-5/32(b)		M	R	•	■	X	X	X	X	3300	†

• Exhaust manifold and muffler omitted. ■ Fuel tank omitted. † Engine equipped with *12 Volt Gear Drive Starter and 16 Amp DC Alternator*.