PARTS MANUAL

Models

EH63, EH64, EH65, EH72 ENGINES

PUB-EP1549
Rev. 07/05

Robin America, Inc.

940 Lively Blvd. • Wood Dale, IL 60191 • Phone: 630-350-8200 • Fax: 630-350-8212
e-mail: sales@robinamerica.com • www.robinamerica.com

© Copyright 2005 Robin America, Inc.

HOW TO USE THIS MANUAL

Robin engines are identified by MODEL, SPECIFICATION, and CODE NUMBER. For each model there may be many different versions called specifications. Each specification will be unique in some way. The difference may only be the paint color or it may have a different type of PTO or some other significant difference.

In order the identify the correct service part number, it is important to confirm the specification and code numbers for your engine. The specification and code number together are know as the PRODUCT NUMBER.

All Robin 4 cycle engines have a Product Number label similar to the label illustrated below.

PRODUCT NUMBER LABEL

PRODUCT NUMBER LABEL LOCATIONS

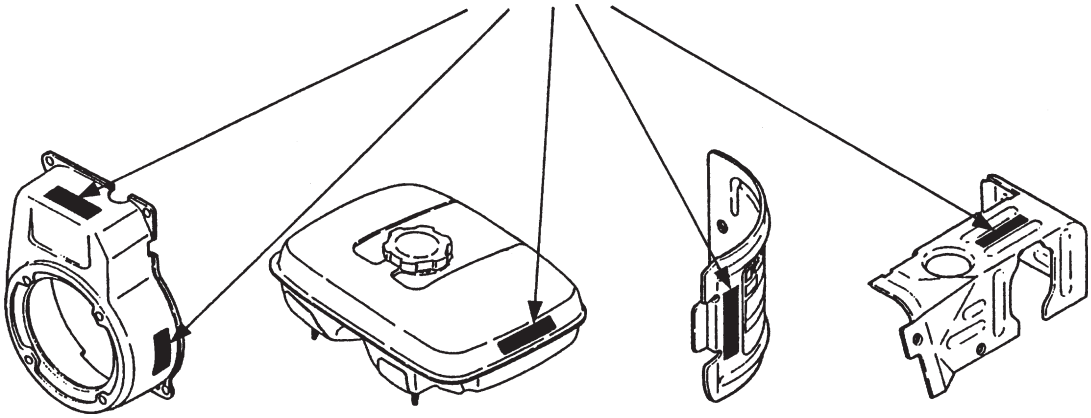

The Product Number Label has a 15 digit alphanumeric string that consists of the SPECIFICATION (SPEC) number (11 digits) and the CODE number (4 digits). Please note the illustration below:

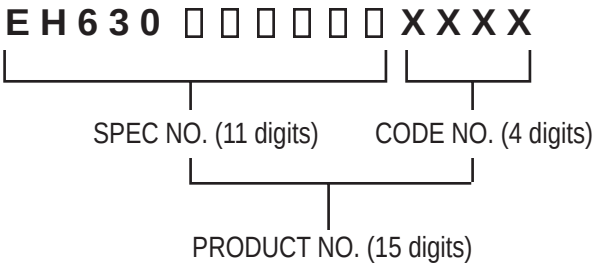

MANUAL LAYOUT

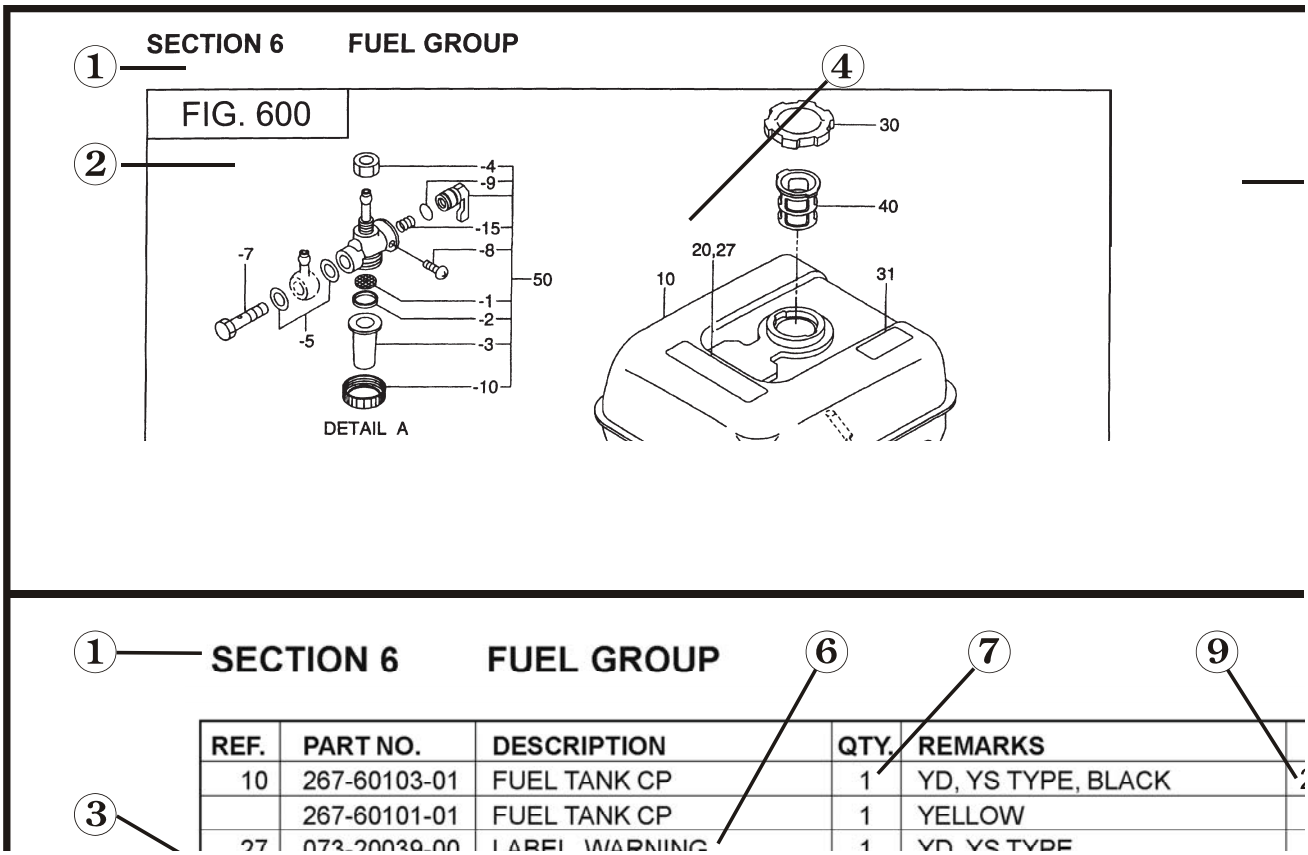

REF.	PART NO.	DESCRIPTION	QTY.	REMARKS
10	267-60103-01	FUEL TANK CP	1	YD, YS TYPE, BLACK
	267-60101-01	FUEL TANK CP	1	YELLOW
27	073-20039-00	LABEL, WARNING	1	YD, YS TYPE

1. SECTION NAME — Parts are broadly classified according to their functions.
Refer to the Group Index (table of contents) for respective section name.

2. FIG. No. — The FIG. number indexes the reference and part numbers to the illustration. Figure numbers that vary only in the tens place (i.e..: 700 and 710) are in a group of the same section (i.e..:Electrical Device Group).

3. REF. No . — The Reference number identifies the part illustration with the corresponding part number in the part list.

4. SUBASSEMBLY — SUBASSEMBLY parts of part assembly are listed below the assembly part. The subassembly part reference number is indicated by the number led by "-" such as "-1", "-2".

5. PART NUMBER — It is the number assigned for sales unit. Use the PART No. when making an order.

6. DESCRIPTION — It is designation of the part.

7. QTY. — Quantity of each part used for each product.

8. REMARKS — This gives a distinctive feature and/or a supplementary comment for the type, the specification, and the part concerned. It also shows part number(s) interchangeable for the part.

9. FROM-TO — This section shows the CODE No. to indicate the history of progress in which improved parts have been introduced in the product. The FROM-TO CODE No. helps to identify PART No. being employed in the product concerned. See the examples below:

-	The part is used in the product irrespective of CODE No.
2101-	The part is used in the products with CODE No. of 2101 and after this number.
- 2100	The part is used in the products with CODE No. of 2100 and before this number.

GROUP INDEX

Group Name **Page**

CRANKCASE GROUP

EH63, EH64,EH65 6

EH72 8

CRANKSHAFT GROUP 10

INTAKE and EXHAUST GROUP

EH63, EH64, EH65 12

EH72 14

GOVERNOR GROUP 16

COOLING and STARTING GROUP 18

FUEL, LUBRICANT GROUP

EH63, EH64, EH65 20

EH72 22

CARBURETOR GROUP

EH63, EH64, EH65 24

EH72 26

OIL COOLER and OIL FILTER GROUP 28

ELECTRIC DEVICE GROUP 30

STARTING MOTOR GROUP 34

ACCESSORY GROUP 38

INDEX OF DESCRIPTION SYMBOLS

SYMBOL	DESCRIPTION	SYMBOL	DESCRIPTION
AY	ASSEMBLY	P=	PITCH (in mm)
CP	COMPLETE	P.T.O. (PTO)	POWER TAKE OFF
EX	EXPORT (from Japan)	REF.	REFERENCE
FIG	FIGURE	R.H. (RH)	RIGHT HAND SIDE
FR.	FRONT	RR.	REAR
"	INCH	STD.	STANDARD
INCL.	INCLUDE	SW	SWITCH
~L	LITER	T=	THICKNESS (in mm)
L=	LENGTH (in. mm)	UN	UNIT
L.H. (LH)	LEFT-HAND SIDE	U.S.	UNDER SIZE
MECH	MECHANICAL	~V	VOLTAGE
NO (NON)	NONE	~W	WATT
OPT.	OPTIONAL	W/	WITH
O.S.	OVER SIZE	W/O	WITHOUT

FIG. 100

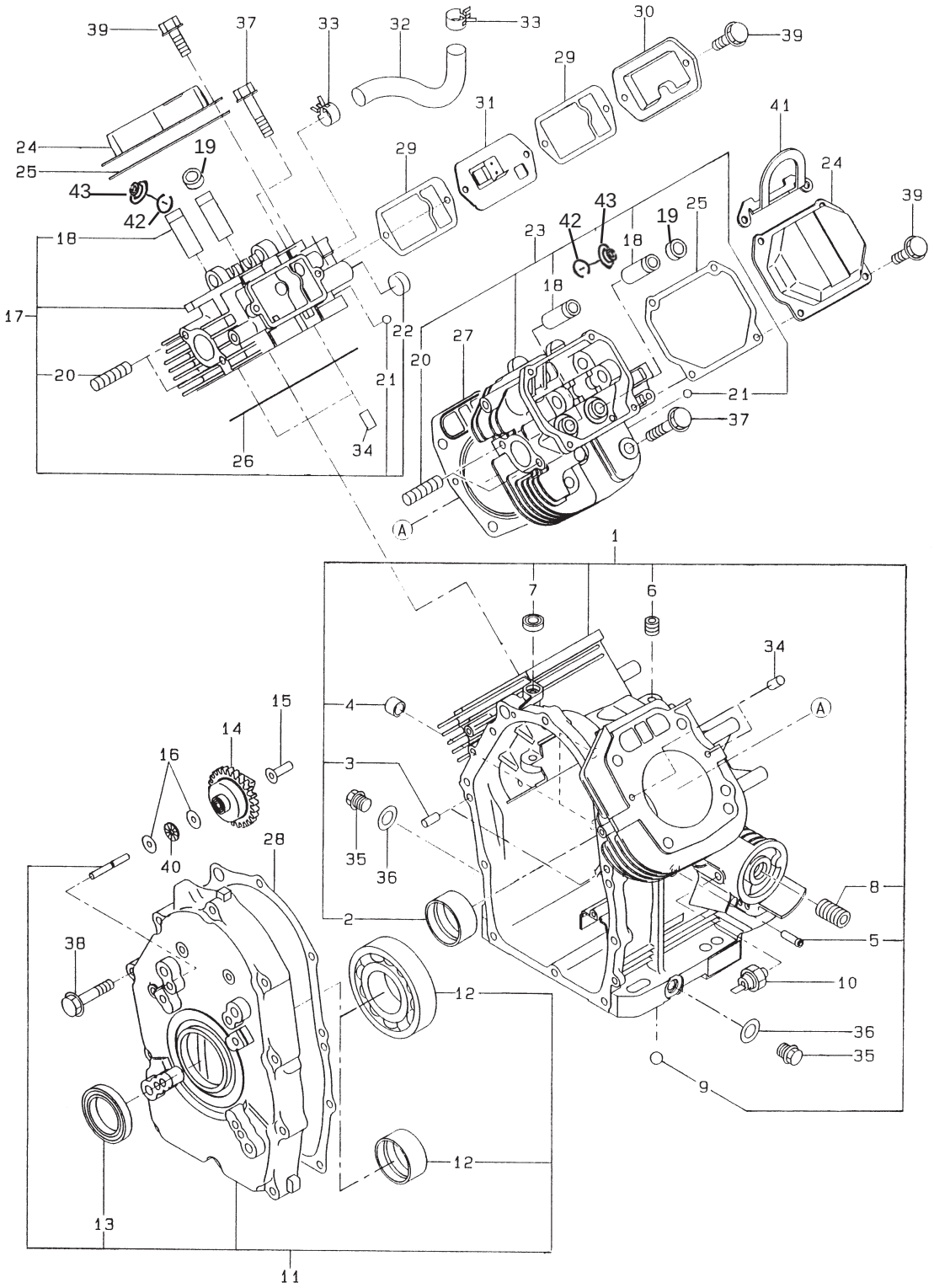
39
37
33
32
33
30
39
29
31
41
24
25
19
29
24
43
42
43
42
19
25
39
18
23
18
18
17
22
27
20
20
21
21
37
26
34
A
1
7
6
34
15
4
A
14
16
3
35
36
28
40
8
2
5
38
12
10
36
35
9
12
13
11

SECTION 1 CRANKCASE GROUP - EH63, 64, 65 - Old Type

REF.	PART NO.	DESCRIPTION	QTY.	REMARKS	FROM-TO	FIG.
1	263-10101-E1	CRANKCASE, compl.	1	Includes items 2 thru 9	~1999999	100
2	263-15802-03	MAIN BEARING	1		~1999999	100
3	X31-00800-80	DOWEL PIN	2		~1999999	100
4	142-55601-03	PIPE	2		~1999999	100
5	159-65401-03	PIPE (PULSE)	1		~1999999	100
6	263-15911-A1	BLIND PLUG	1		~1999999	100
7	044-00800-10	OIL SEAL	1		~1999999	100
8	263-15901-03	UNION	1		~1999999	100
9	045-01200-10	STEEL BALL	1		~1999999	100
10	248-76301-01	SWITCH, OIL PRESSURE	1		~1999999	100
*11	263-11001-B1	MAIN BEARING COVER, compl.	1	Ball bearing, pilot Ø 6.438	~1999999	100
*11	263-11101-C1	MAIN BEARING COVER, compl.	1	Shell bearing, pilot Ø 6.438	~1999999	100
*11	263-11002-B1	MAIN BEARING COVER, compl.	1	Ball bearing, pilot Ø 5.75	~1999999	100
*11	263-11102-C1	MAIN BEARING COVER, compl.	1	Shell bearing, pilot Ø 5.75	~1999999	100
12	060-04500-10	BALL BEARING	1		~1999999	100
12	263-15802-03	MAIN BEARING	1		~1999999	100
13	044-04200-30	OIL SEAL	1		~1999999	100
14	263-45001-C1	GOVERNOR GEAR, compl.	1		~1999999	100
15	277-41901-03	GOVERNOR SLEEVE	1		~1999999	100
16	263-46214-A3	WASHER	2		~1999999	100
*17	263-13001-B1	CYLINDER HEAD 1, compl.	1	Includes items 18 thru 22	~1999999	100
18	263-14201-03	VALVE GUIDE	4		~1999999	100
19	132-07AA0-50	SEAL - INTAKE VALVE	2		~1999999	100
20	010-50802-90	STUD	8		~1999999	100
21	X45-00600-10	STEEL BALL	1		~1999999	100
22	263-16201-03	PLUG	1		~1999999	100
*23	263-13101-B1	CYLINDER HEAD 2, compl.	1	Includes item 18 thru 21	~1999999	100
24	246-15501-01	ROCKER COVER, compl.	2		~1999999	100
25	246-16002-13	GASKET, rocker cover	2		~1999999	100
26	263-15001-13	GASKET 1, cyl. head	1		~1999999	100
27	263-15101-13	GASKET 2, cyl. head	1		~1999999	100
28	263-16001-A3	GASKET, main bearing cover	1		~1999999	100
29	263-16006-03	GASKET, breather plate	2		~1999999	100
30	263-14301-03	BREATHER COVER	1		~1999999	100
31	263-14401-01	BREATHER PLATE, compl.	1		~1999999	100
32	263-18003-03	RUBBER PIPE	1		~1999999	100
33	263-68511-03	HOSE CLAMP	2		~1999999	100
34	X31-00600-20	DOWEL PIN	4		~1999999	100
35	040-11400-30	PLUG	2		~1999999	100
36	021-11400-20	GASKET	2		~1999999	100
37	X11-01000-30	FLANGE BOLT	8		~1999999	100
38	X11-00802-20	FLANGE BOLT	10		~1999999	100
39	X11-00600-30	FLANGE BOLT	10		~1999999	100
40	263-46215-A3	THRUST BEARING	1		~1999999	100
41	263-19001-A3	HOOK	2		~1999999	100
42	056-51000-50	CLIP	2		~1999999	100
43	263-35341-03	RETAINER PLATE	2		~1999999	100

FIG. 100

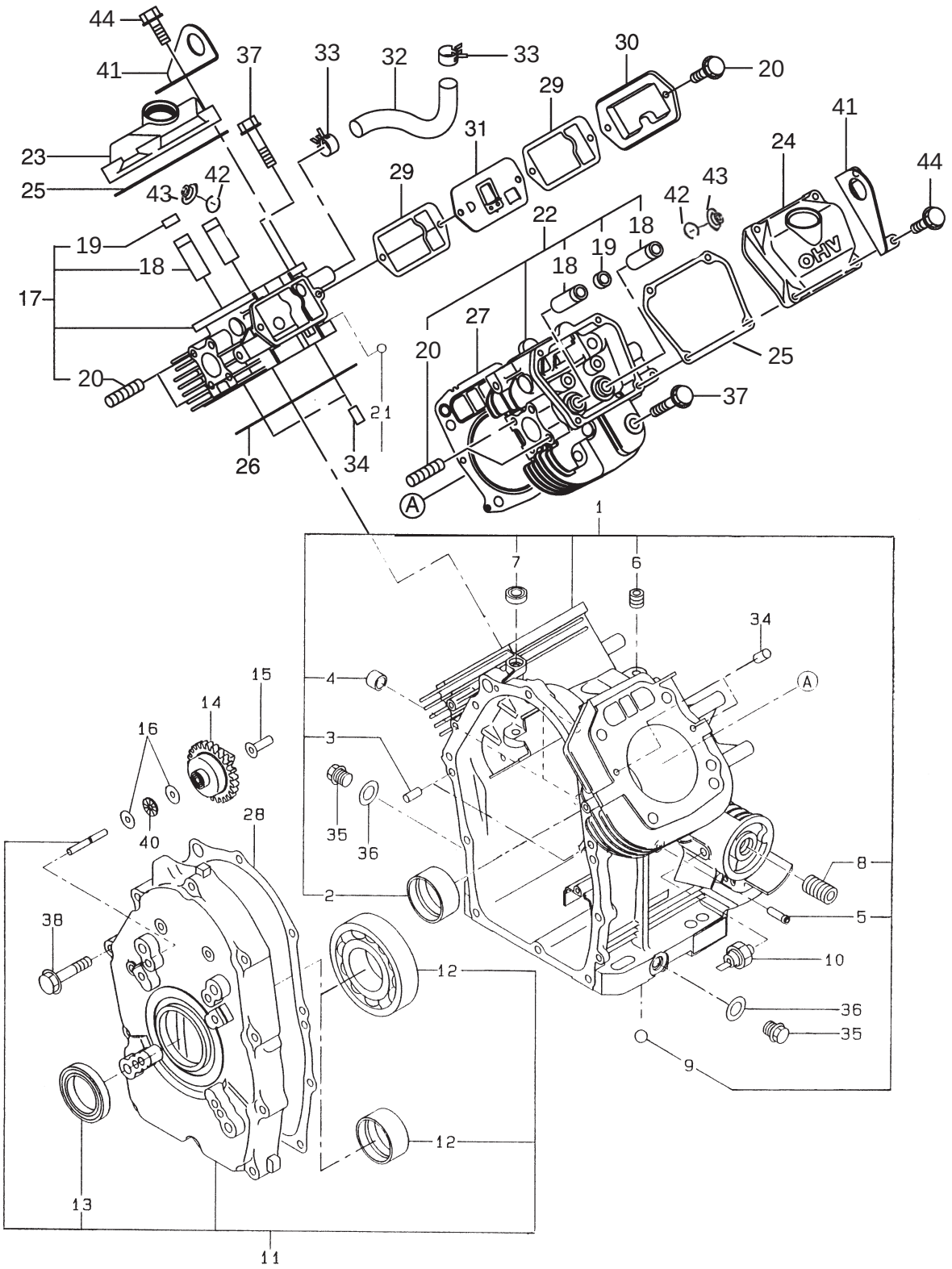
44
41
37
33
32
33
30
20
29
31
23
25
43
42
29
41
24
44
43
42
22
18
19
18
19
18
17
27
20
25
20
21
37
26
34
A
1
7
6
34
4
A
15
14
16
3
35
36
40
28
8
2
5
38
12
10
36
35
9
12
13
11

SECTION 1 CRANKCASE GROUP - EH63, 64, 65 - New Type

REF.	PART NO.	DESCRIPTION	QTY.	REMARKS	FROM-TO	FIG.
1	263-10111-A1	CRANKCASE, compl.	1	Includes items 2 thru 9	2000001~	100
2	263-15802-03	MAIN BEARING	1		2000001~	100
3	X31-00800-80	DOWEL PIN	2		2000001~	100
4	142-55601-03	PIPE	2		2000001~	100
5	159-65401-03	PIPE (PULSE)	1		2000001~	100
6	263-15911-A1	BLIND PLUG	1		2000001~	100
7	044-00800-10	OIL SEAL	1		2000001~	100
8	263-15901-03	UNION	1		2000001~	100
9	045-01200-10	STEEL BALL	1		2000001~	100
10	248-76301-01	SWITCH, OIL PRESSURE	1		2000001~	100
*11	263-11001-B1	MAIN BEARING COVER, compl.	1	Ball bearing, pilot Ø 6.438	2000001~	100
*11	263-11101-C1	MAIN BEARING COVER, compl.	1	Shell bearing, pilot Ø 6.438	2000001~	100
*11	263-11002-B1	MAIN BEARING COVER, compl.	1	Ball bearing, pilot Ø 5.75	2000001~	100
*11	263-11102-C1	MAIN BEARING COVER, compl.	1	Shell bearing, pilot Ø 5.75	2000001~	100
12	060-04500-10	BALL BEARING	1		2000001~	100
12	263-15802-03	MAIN BEARING	1		2000001~	100
13	044-04200-30	OIL SEAL	1		2000001~	100
14	263-45001-C1	GOVERNOR GEAR, compl.	1		2000001~	100
15	263-41901-03	GOVERNOR SLEEVE	1		2000001~	100
16	263-46214-A3	WASHER	2		2000001~	100
*17	263-13211-A1	CYLINDER HEAD 1, compl.	1	Includes items 18 thru 22	2000001~	100
18	263-14201-03	VALVE GUIDE	4		2000001~	100
19	132-07AA0-50	SEAL - INTAKE VALVE	2		2000001~	100
20	010-50802-90	STUD	8		2000001~	100
21	X45-00600-10	STEEL BALL	2		2000001~	100
22	263-13311-A1	CYLINDER HEAD 2, compl.	1	Includes item 18 thru 21	2000001~	100
23	263-15501-A3	ROCKER COVER, compl.	1		2000001~	100
24	280-15501-A3	ROCKER COVER, compl.	1		2000001~	100
25	263-16101-A3	GASKET, rocker cover	2		2000001~	100
26	263-15021-11	GASKET 1, cyl. head	1		2000001~	100
27	263-15121-01	GASKET 2, cyl. head	1		2000001~	100
28	263-16002-A3	GASKET, main bearing cover	1		2000001~	100
29	263-16006-03	GASKET, breather plate	2		2000001~	100
30	263-14301-03	BREATHER COVER	1		2000001~	100
31	280-14401-A1	BREATHER PLATE, compl.	1		2000001~	100
32	263-18003-03	RUBBER PIPE	1		2000001~	100
33	263-68511-03	HOSE CLAMP	2		2000001~	100
34	X31-00600-20	DOWEL PIN	4		2000001~	100
35	X40-11400-30	PLUG	2		2000001~	100
36	021-11400-20	GASKET	2		2000001~	100
37	X11-01000-70	FLANGE BOLT	8		2000001~	100
38	X11-00802-20	FLANGE BOLT	10		2000001~	100
39	X11-00600-30	FLANGE BOLT	10		2000001~	100
40	263-46215-A3	THRUST BEARING	1		2000001~	100
41	280-19001-A3	HOOK	2		2000001~	100
42	056-51000-50	CLIP	2		2000001~	100
43	263-35341-03	RETAINER PLATE	2		2000001~	100

FIG. 100

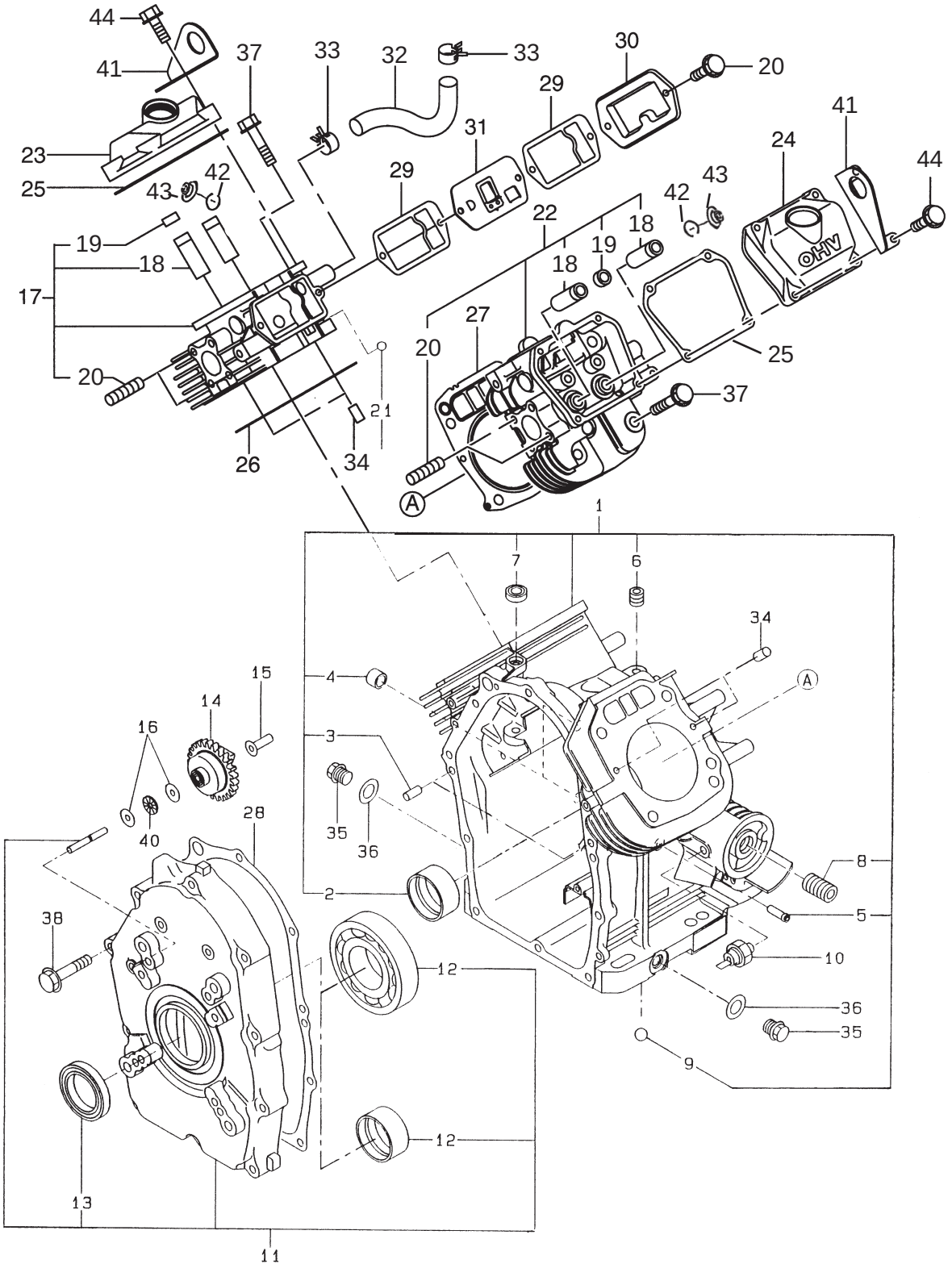
44
41
37
33
32
33
30
20
29
31
23
25
43
42
29
41
24
44
42
43
22
18
19
18
19
18
17
27
20
25
20
37
21
26
34
A
1
7
6
34
A
4
15
14
16
3
35
36
40
28
8
2
5
38
12
10
36
35
9
12
13
11

REF.	PART NO.	DESCRIPTION	QTY.	REMARKS	FROM-TO	FIG.
44	X11-00601-01	FLANGE BOLT	8		2000001~	100

FIG. 110

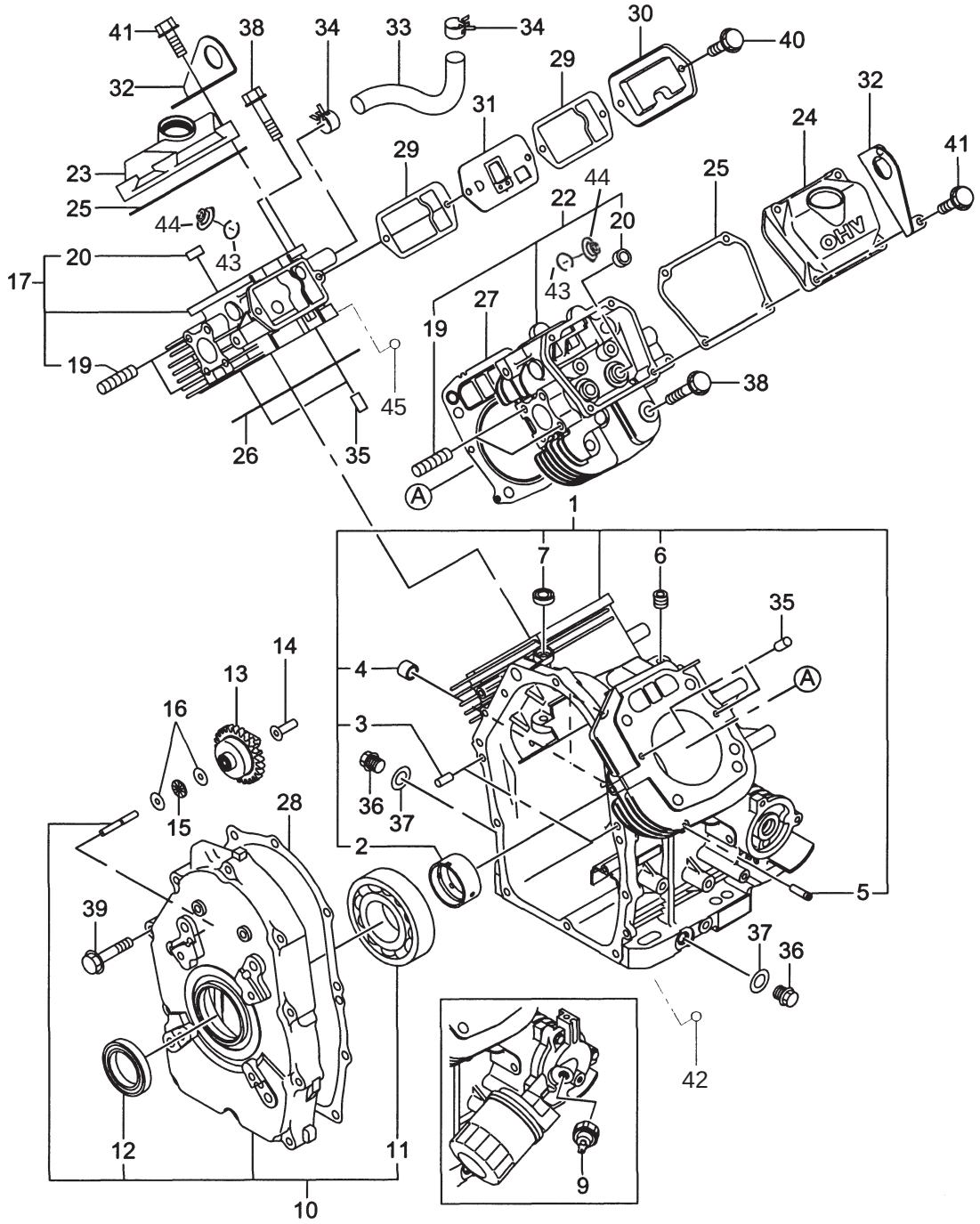
41
38
34
33
34
30
40
32
29
31
32
24
41
23
29
25
25
44
22
44
20
43
20
17
43
27
19
19
38
45
26
35
A
1
7
6
35
14
4
13
A
16
3
36
37
15
28
2
5
39
37
36
42
12
11
9
10

SECTION 1 CRANKCASE GROUP - EH72

REF.	PART NO.	DESCRIPTION	QTY.	REMARKS	FROM-TO	FIG.
*1	280-10101-B1	CRANKCASE, compl.	1	Includes items 2 thru 7		110
2	263-15802-03	MAIN BEARING	1			110
3	X31-00800-80	DOWEL PIN	2			110
4	142-55601-03	PIPE	2			110
5	159-65401-03	PIPE (PULSE)	1			110
6	263-15911-A1	BLIND PLUG, compl.	1			110
7	044-00800-10	OIL SEAL	1			110
9	248-76301-01	SWITCH OIL PRESSURE	1			110
*10	263-11004-A0	MAIN BEARING COVER,compl.	1	STD		110
10	280-11004-A1	MAIN BEARING COVER,compl.	1	Extended Oil Gauge		110
11	060-04500-10	BALL BEARING	1			110
12	044-04200-30	OIL SEAL	1			110
13	263-45001-C1	GOVERNOR GEAR, compl.	1			110
14	263-41901-03	GOVERNOR SLEEVE	1			110
15	263-46215-A3	THRUST BEARING	1			110
16	263-46214-A3	WASHER	2			110
*17	280-13001-B1	CYLINDER HEAD 1, compl.	1	Includes items 19 and 20		110
19	010-50802-90	STUD	8			110
20	132-07AA0-50	SEAL-INTAKE VALVE	2			110
*22	280-13101-B1	CYLINDER HEAD 2, compl.	1	Includes items 19 and 20		110
23	263-15501-A3	ROCKER COVER	1			110
24	280-15501-A3	ROCKER COVER	1			110
25	263-16101-A3	GASKET, rocker cover	2			110
26	280-15001-03	GASKET 1, cyl. head	1			110
27	280-15101-03	GASKET 2, cyl. head	1			110
28	263-16002-A3	GASKET, main bearing cover	1			110
29	263-16006-03	GASKET, breather plate	2			110
30	263-14301-03	BREATHER COVER	1			110
31	280-14401-A1	BREATHER PLATE, compl.	1			110
32	280-19001-A3	HOOK	2			110
33	263-18003-03	RUBBER PIPE	1			110
34	263-68511-03	HOSE CLAMP	2			110
35	X31-00600-20	DOWEL PIN	4			110
36	X40-11400-30	PLUG	2			110
37	021-11400-20	GASKET	2			110
38	X11-01000-70	FLANGE BOLT	8			110
39	X11-00802-20	FLANGE BOLT	10			110
40	X11-00600-30	FLANGE BOLT	2			110
41	X11-00601-01	FLANGE BOLT	8			110
42	045-01200-10	STEEL BALL	1			110
43	056-51000-50	CLIP	2			110
44	263-35341-03	RETAINER PLATE	2			110
45	X45-00600-10	STEEL BALL	2			110

FIG. 200

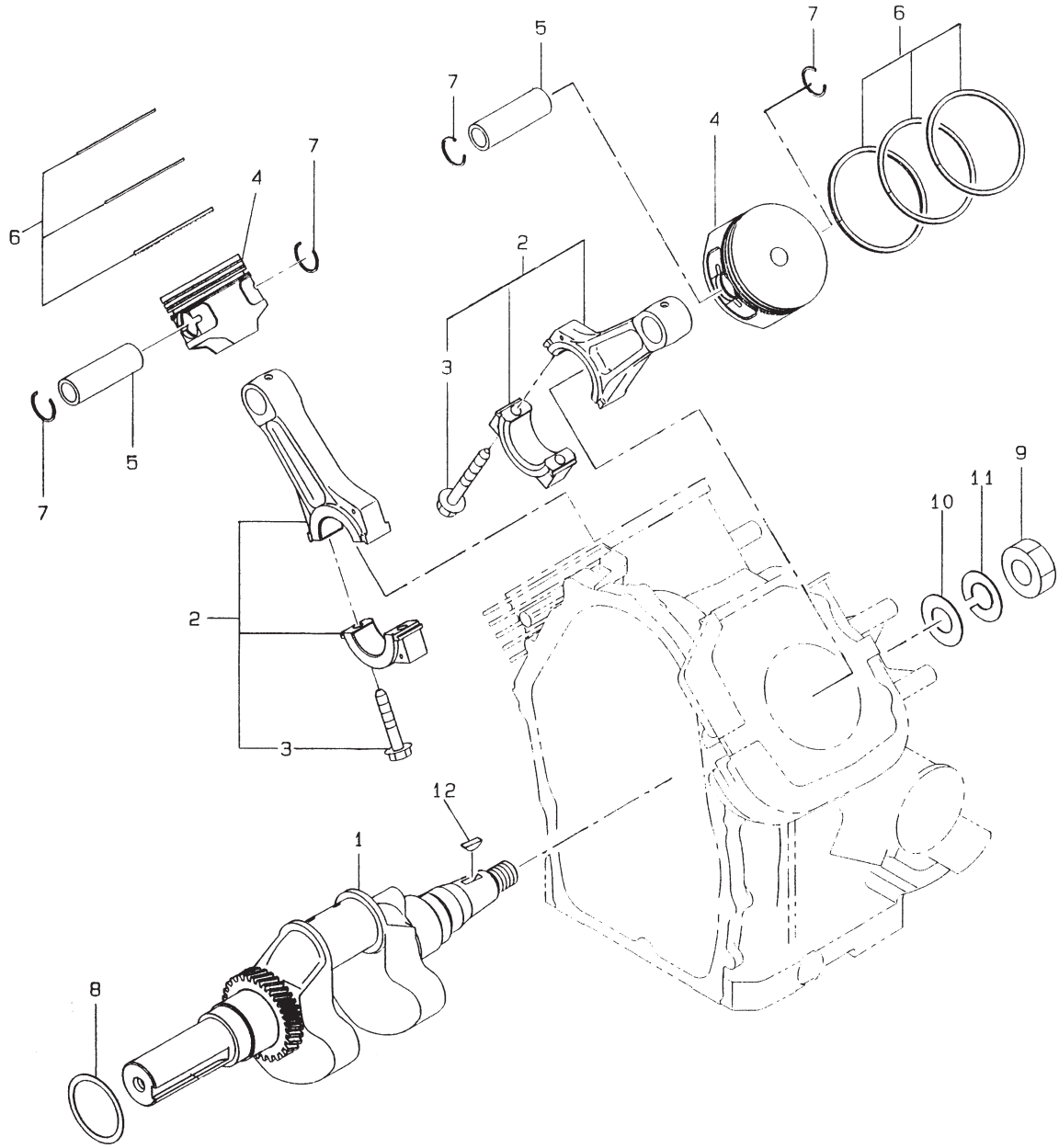

SECTION 2 CRANKSHAFT GROUP

REF.	PART NO.	DESCRIPTION	QTY.	REMARKS	FROM-TO	FIG.
1	263-20902-B1	CRANKSHAFT, compl.	1	1.00” key-3/8-24 UNF tap		200
	263-21101-B1	CRANKSHAFT, compl.	1	1-1/8” key-7/16-20 UNF tap		200
	263-21001-B1	CRANKSHAFT, compl.	1	1-7/16” key-5/8-18 UNF tap		200
	263-21201-A1	CRANKSHAFT, compl.	1	SAE taper - 2.25/12-5/16-24UNF		200
	263-21301-B1	CRANKSHAFT, compl.	1	SAE pump - 1.00” threaded		200
	263-20201-01	CRANKSHAFT, compl.	1	Metric - 35mm key-M10x1.25T2		200
	263-20701-01	CRANKSHAFT, compl.	1	Metric taper-1/10-30mm-M10x1.5t2	~1999999	200
1	280-21001-A1	CRANKSHAFT, compl.	1	EH72		200
*2	263-22501-00	CONNECTING ROD AY	2	EH72		200
	263-22501-00	CONNECTING ROD AY	2	EH65	~1999999	200
	263-22601-00	CONNECTING ROD AY	2	EH65	2000001~	200
3	246-23001-13	CONNECTING ROD BOLT	2	EH72		200
	246-23001-13	CONNECTING ROD BOLT	2	EH65	~1999999	200
	011-05084-00	CONNECTING ROD BOLT	2	EH65	2000001~	200
4	263-23411-A3	PISTON	2	STD. - EH63, EH64, EH65		200
	263-23412-A3	PISTON	2	Oversize0.25mm EH63,EH64,EH65		200
	263-23413-A3	PISTON	2	Oversize0.50mm EH63,EH64 EH65		200
4	280-23401-A3	PISTON	2	STD. EH72		200
	280-23402-A3	PISTON	2	Oversize 0.25mm EH72		200
	280-23403-A3	PISTON	2	Oversize 0.50mm EH72		200
5	263-23301-03	PISTON PIN	2			200
6	263-23501-07	PISTON RING SET	2	STD EH63, EH64, EH65		200
	263-23502-07	PISTON RING SET	2	Oversize0.25mm EH63,EH64,EH65		200
	263-23503-07	PISTON RING SET	2	Oversize0.50mm EH63,EH64,EH65		200
6	280-23501-07	PISTON RING SET	2	STD. EH72		200
	280-23502-07	PISTON RING SET	2	Oversize 0.25mm EH72		200
	280-23503-07	PISTON RING SET	2	Oversize 0.50mm EH72		200
7	056-52100-20	CLIP	4			200
8	263-25011-A3	SPACER, t = 0.6	1	Select one piece only		200
	263-25012-A3	SPACER, t = 0.8	1	Select one piece only		200
	263-25013-A3	SPACER, t = 1.0	1	Select one piece only		200
	263-25014-00	SPACER, t=1.2	1	Select one piece only		200
9	002-18180-00	NUT	1			200
	X18-01800-01	NUT	1	EH65	2000001~	200
10	003-10180-00	WASHER	1			200
11	003-20180-00	SPRING WASHER	1			200
12	005-32054-01	WOODRUFF KEY	1			200
*	263-99001-07	GASKET SET		EH65 & EH72		200

FIG. 300

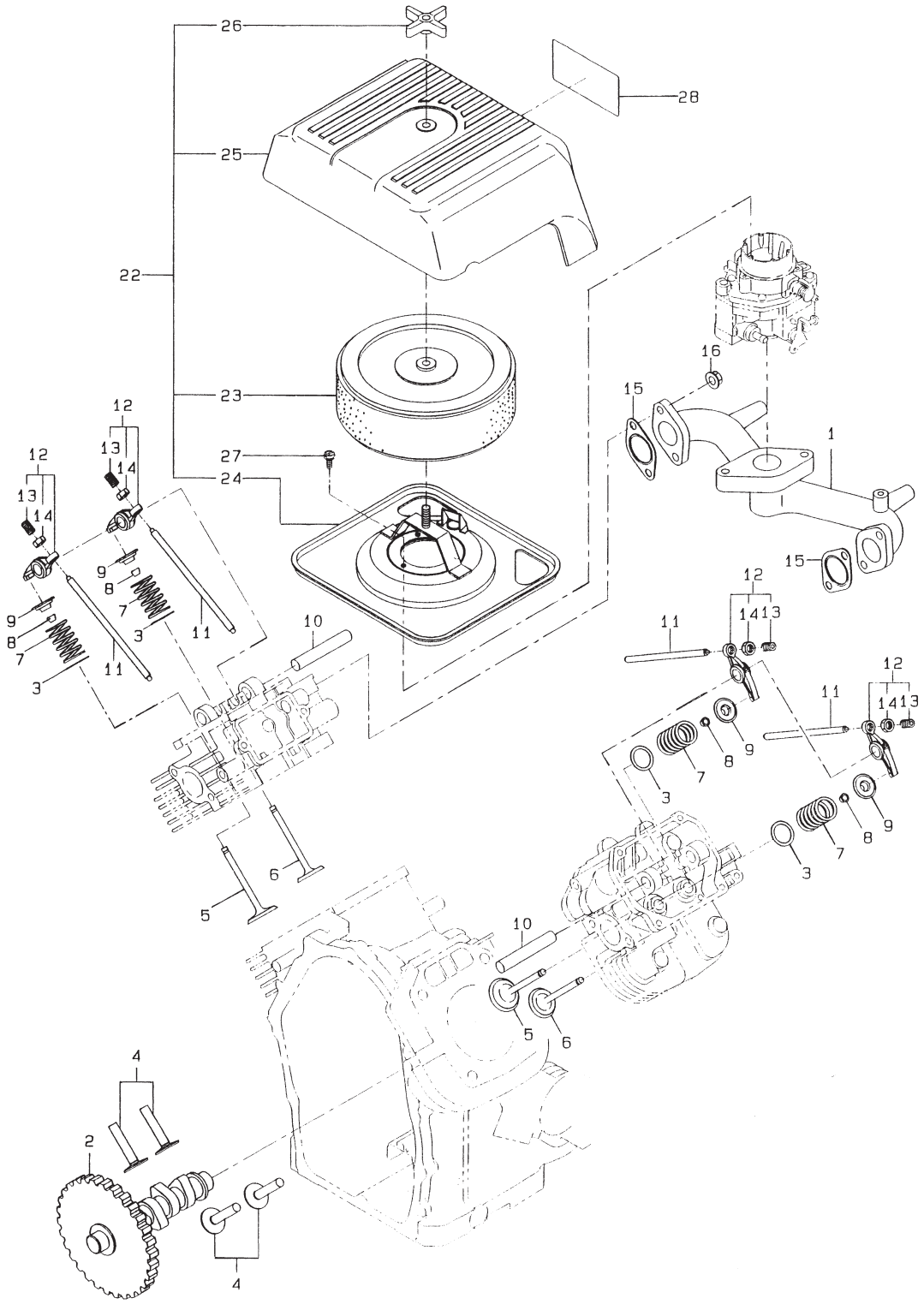

REF.	PART NO.	DESCRIPTION	QTY.	REMARKS	FROM-TO	FIG.
1	263-33001-03	INTAKE MANIFOLD	1		~1999999	300
2	263-31701-13	CAMSHAFT	1		~1999999	300
3	020-02000-10	WASHER	4		~1999999	300
4	263-33301-A3	TAPPET	4		~1999999	300
5	263-33401-03	INTAKE VALVE	2		~1999999	300
6	263-33502-13	EXHAUST VALVE	2		~1999999	300
7	246-33611-03	VALVE SPRING	4		~1999999	300
8	246-35501-03	COLLET VALVE	8		~1999999	300
9	246-33711-13	SPRING RETAINER	4		~1999999	300
10	239-35001-03	ROCKER SHAFT	2		~1999999	300
11	263-35311-01	PUSH ROD	4		~1999999	300
12	246-36101-10	ROCKER ARM AY	4		~1999999	300
13	014-90800-21	ADJUSTING SCREW	4		~1999999	300
14	017-00800-90	NUT	4		~1999999	300
15	263-35503-A3	GASKET	2		~1999999	300
16	002-38080-00	FLANGE NUT	4		~1999999	300
22	263-32601-00	AIR CLEANER AY	1		~1999999	300
23	263-32610-A1	CLEANER ELEMENT, CP	1		~1999999	300
24	263-32620-01	CLEANER BASE CP	1		~1999999	300
25	263-32630-03	CLEANER COVER	1		~1999999	300
26	263-32640-01	WING NUT	1		~1999999	300
27	X10-10500-10	FLANGE BOLT	3		~1999999	300
28	263-91703-03	LABEL, trademark	1	For EH63	~1999999	300
28	263-91702-03	LABEL, trademark	1	For EH64	~1999999	300
28	263-91701-03	LABEL, trademark	1	For EH65	~1999999	300

FIG. 300

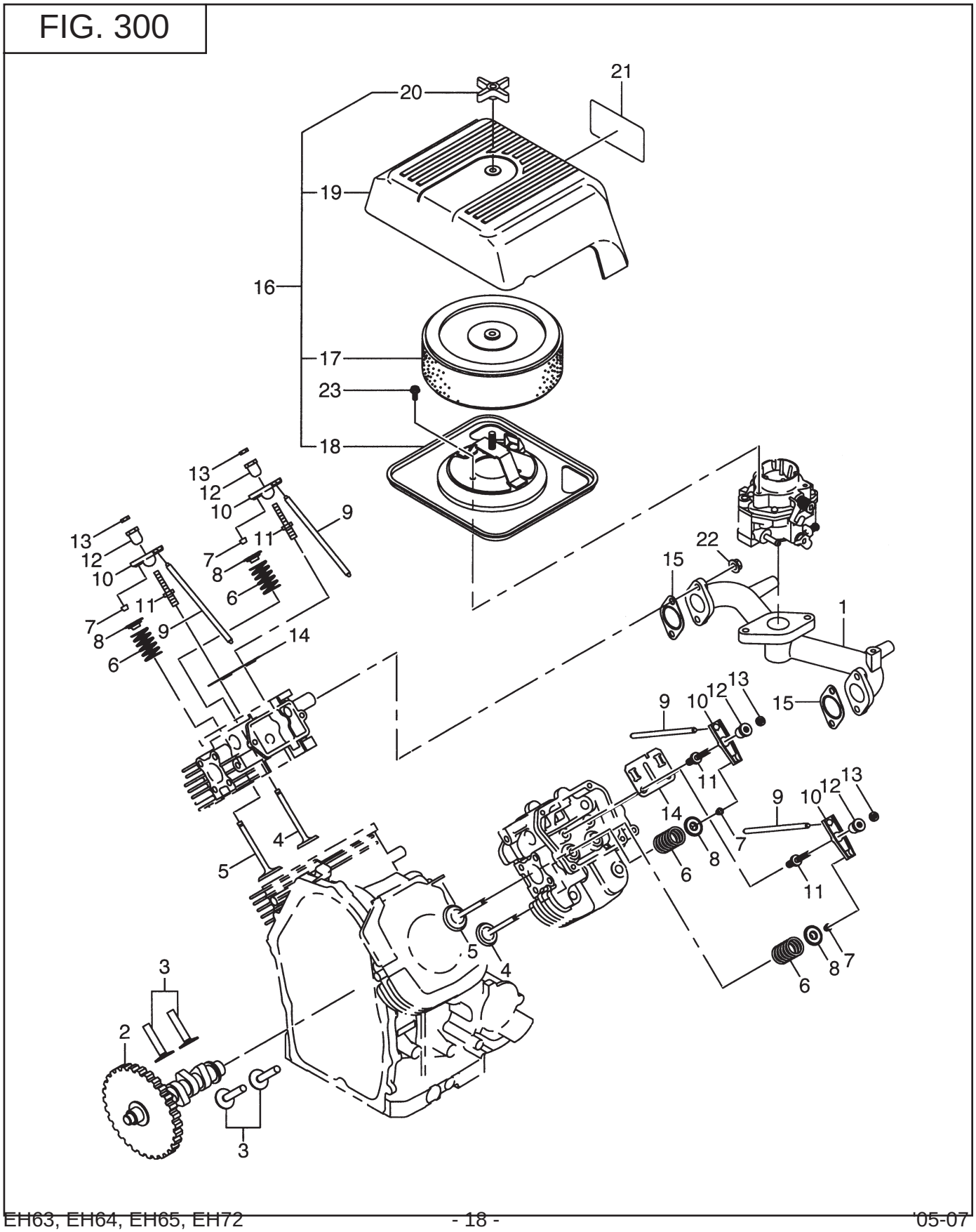

SECTION 3 INTAKE and EXHAUST GROUP - EH63, 64, 65, 72 - New Type

REF.	PART NO.	DESCRIPTION	QTY.	REMARKS	FROM-TO	FIG.
1	280-33001-C3	INTAKE MANIFOLD	1		2000001~	300
2	280-31701-13	CAMSHAFT	1		2000001~	300
3	263-33301-A3	TAPPET	4		2000001~	300
4	263-33401-03	INTAKE VALVE	2		2000001~	300
5	263-33502-13	EXHAUST VALVE	2		2000001~	300
6	246-33611-03	VALVE SPRING	4		2000001~	300
7	246-35501-03	COLLET-VALVE	8		2000001~	300
8	246-33711-13	SPRING RETAINER	4		2000001~	300
9	263-35321-B1	PUSH ROD, compl.	4		2000001~	300
10	267-36101-13	ROCKER ARM	4		2000001~	300
11	261-35801-13	BOLT, pivot	4		2000001~	300
12	267-35701-03	PIVOT	4		2000001~	300
13	017-00601-10	NUT	4		2000001~	300
14	263-37001-A3	GUIDE PLATE	2		2000001~	300
15	263-35503-A3	GASKET, intake manifold	2		2000001~	300
*16	280-32601-A0	AIR CLEANER AY	1	Includes items 17 thru 20	2000001~	300
17	263-32610-A1	CLEANER ELEMENT, compl.	1		2000001~	300
18	280-32620-A1	CLEANER BASE, compl.	1		2000001~	300
19	263-32630-03	CLEANER COVER	1		2000001~	300
20	263-32640-01	WING NUT	1		2000001~	300
21	263-91701-03	LABEL (TRADE MARK)	1	EH63	2000001~	300
21	263-91702-03	LABEL (TRADE MARK)	1	EH64	2000001~	300
21	263-91703-03	LABEL (TRADE MARK)	1	EH65	2000001~	300
21	280-91701-A3	LABEL (TRADE MARK)	1	EH72	2000001~	300
22	002-38080-00	FLANGE NUT	4		2000001~	300
23	X11-00600-20	FLANGE BOLT	3		2000001~	300

FIG. 400

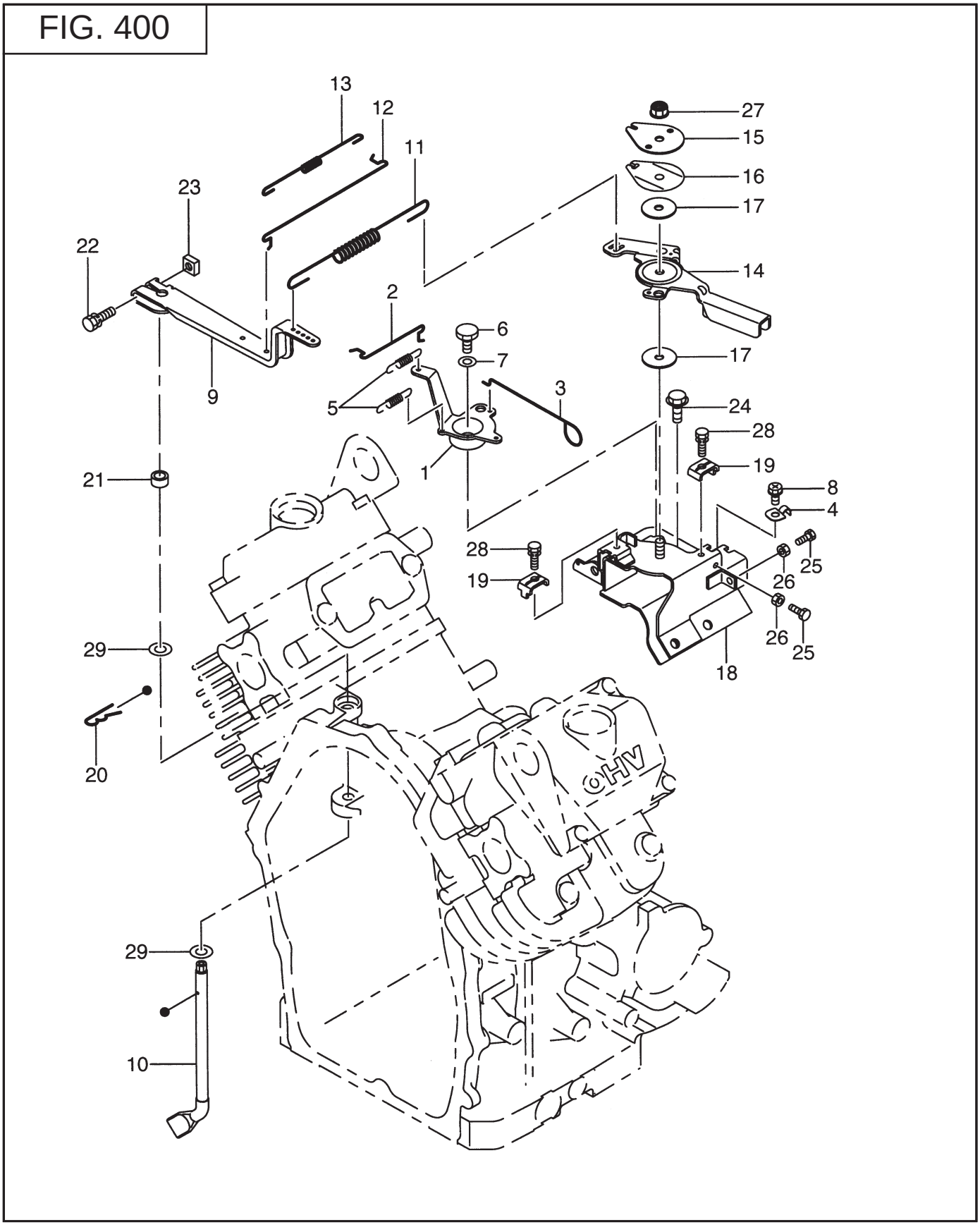
13
12
11
27
15
16
17
23
22
14
2
6
7
17
9
5
3
24
28
1
19
21
8
4
28
25
19
26
26
25
29
18
20
29
10

SECTION 4 GOVERNOR GROUP

REF.	PART NO.	DESCRIPTION	QTY.	REMARKS	FROM-TO	FIG.
1	263-46001-03	CHOKE CONTROL LINK	1			400
2	263-46011-A3	CHOKE CONTROL ROD	1			400
3	263-43901-A3	CHOKE KNOB	1			400
4	263-46010-03	CLAMP, choke knob	1			400
5	261-45201-03	RETURN SPRING	2			400
6	226-43101-01	LINK PIVOT	1			400
7	003-22100-00	WAVED WASHER	1			400
8	X15-20500-10	TAPPING SCREW	1			400
9	263-42301-B3	GOVERNOR LEVER	1			400
10	263-42201-A3	GOVERNOR SHAFT	1			400
11	263-42501-A3	GOVERNOR SPRING	1	EH65, EH72		400
11	263-42503-A3	GOVERNOR SPRING	1	EH63, EH64		400
12	263-42701-A3	GOVERNOR ROD	1			400
13	263-42801-03	ROD SPRING	1			400
14	263-43301-A3	SPEED CONTROL LEVER	1			400
15	227-43501-13	STOP PLATE	1			400
16	263-45002-03	SPRING WASHER	1			400
17	021-70600-30	FRICTION WASHER	2			400
18	263-45011-02	BRACKET UNIT, speed control	1			400
19	261-43901-03	CLAMP	2			400
20	005-11060-01	SNAP PIN	1			400
21	X23-00801-50	SPACER	1			400
22	001-14063-00	BOLT and WASHER AY	1			400
23	X18-60600-20	NUT	1			400
24	X11-00600-20	FLANGE BOLT	2			400
25	X11-50500-20	BOLT	2			400
26	002-27050-00	NUT	2			400
27	X17-60600-20	SELF LOCKING NUT	1			400
28	001-17052-00	BOLT and WASHER AY	2			400
29	003-10080-00	WASHER	2			400

FIG. 500

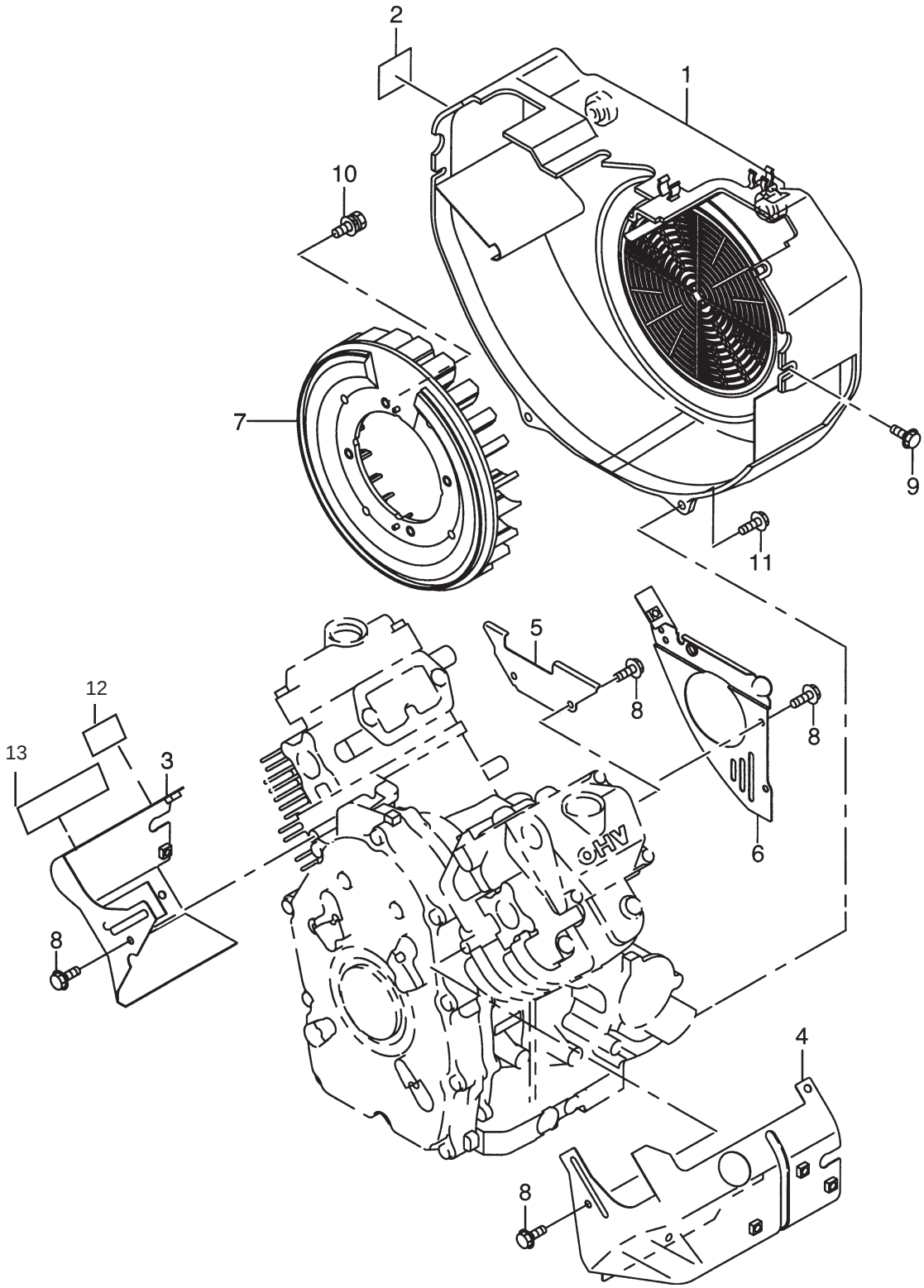

REF.	PART NO.	DESCRIPTION	QTY.	REMARKS	FROM-TO	FIG.
1	263-51121-B2	BLOWER HOUSING UNIT	1	EH63, EH64, EH65		500
1	280-51101-B1	BLOWER HOUSING UNIT	1	EH72		500
2	263-92001-03	LABEL, warning	1			500
3	263-52601-01	CYLINDER BAFFLE 1, cp.	1	EH63, EH64, EH65	~1999999	500
3	263-52612-A1	CYLINDER BAFFLE 1, cp.	1	EH63,EH64,EH65,EH72	2000001~	500
4	263-52704-A1	CYLINDER BAFFLE 2, cp.	1	EH63, EH64, EH65		500
4	280-52701-B1	CYLINDER BAFFLE 2, cp.	1	EH72		500
5	263-52801-03	CYLINDER BAFFLE 3, cp.	1			500
6	263-52911-B2	CYLINDER BAFFLE 4, cp.	1	EH63,EH64,EH65	~1999999	500
6	263-52912-A1	CYLINDER BAFFLE 4, cp.	1	EH63,EH64,EH65,EH72	2000001~	500
7	263-54101-02	COOLING BLOWER UNIT	1			500
8	X11-00600-20	FLANGE BOLT	8			500
9	X11-00601-40	FLANGE BOLT	2			500
10	001-14061-60	BOLT and WASHER AY	4			500
11	X11-00600-30	FLANGE BOLT	6			500

FIG. 600

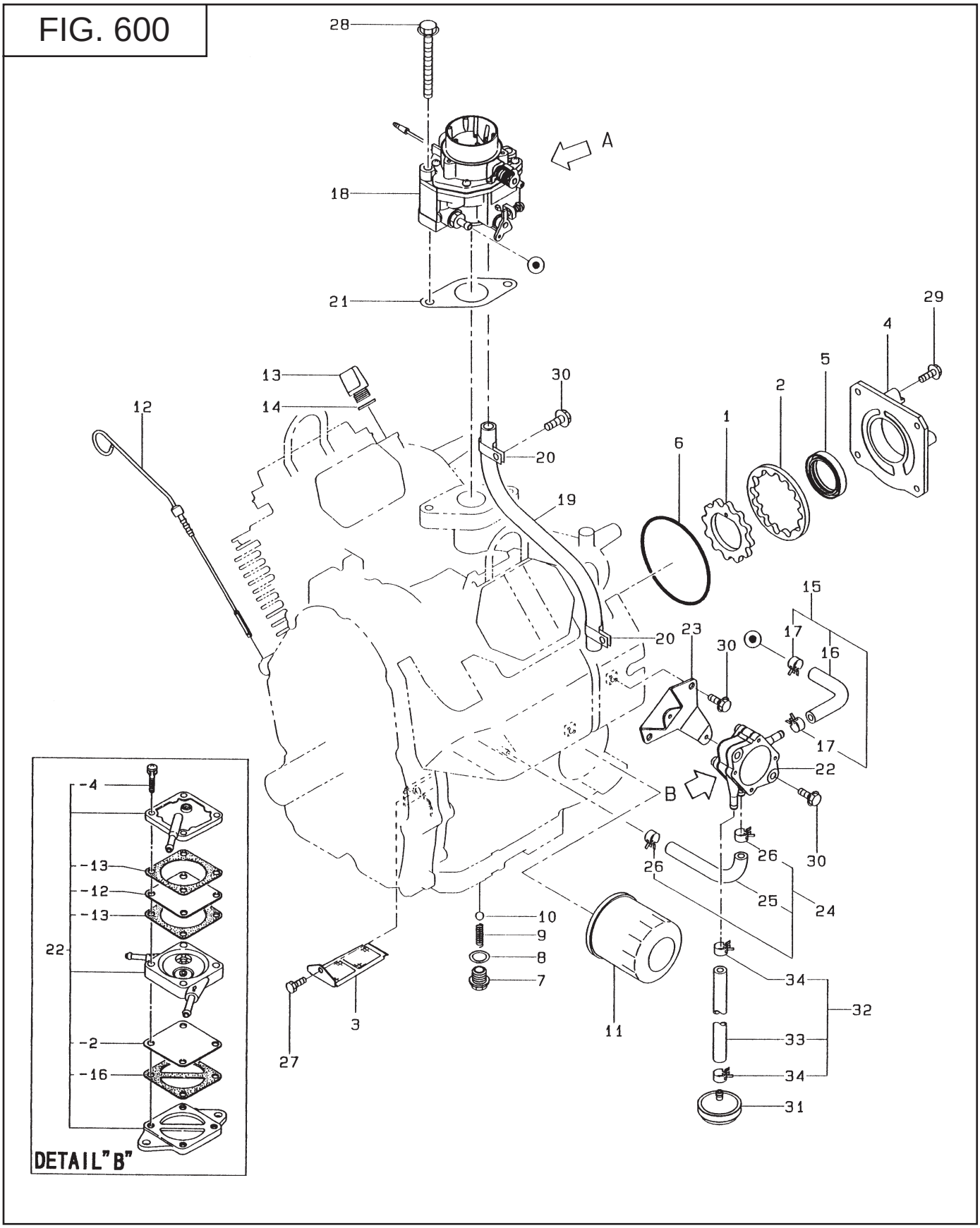
28
A
18
21
29
4
5
2
1
6
13
14
30
12
20
19
15
17
16
20
23
30
17
22
B
30
26
26
25
24
10
9
8
7
34
32
33
34
31
11
3
27
-4
-13
-12
-13
22
-2
-16
DETAIL"B"

REF.	PART NO.	DESCRIPTION	QTY.	REMARKS	FROM-TO	FIG.
1	263-63901-03	INNER ROTOR	1		~1999999	600
2	263-63902-03	OUTER ROTOR	1		~1999999	600
3	263-64302-02	OIL PUMP FILTER UNIT	1		~1999999	600
4	263-64001-B1	OIL PUMP COVER, compl.	1		~1999999	600
5	044-03501-70	OIL SEAL	1		~1999999	600
6	x24-08900-30	O RING	1		~1999999	600
7	263-65001-13	PLUG, oil relief	1		~1999999	600
8	003-70140-00	GASKET, aluminum	1		~1999999	600
9	248-65601-03	SPRING, relief valve	1		~1999999	600
10	006-90308-00	STEEL BALL	1		~1999999	600
11	248-65801-00	OIL FILTER AY	1		~1999999	600
12	263-63603-01	OIL GAUGE, compl.	1		~1999999	600
13	263-63602-03	OIL FILTER CAP	1		~1999999	600
14	021-31600-10	GASKET	1		~1999999	600
15	263-62606-B1	FUEL PIPE, compl.	1		~1999999	600
16	263-68006-B3	RUBBER PIPE	1		~1999999	600
17	263-68501-03	HOSE CLAMP	2		~1999999	600
18	263-62303-10	CARBURETOR AY	1	EH65	~1999999	600
	263-62403-10	CARBURETOR AY	1	EH64	~1999999	600
	263-62503-10	CARBURETOR AY	1	EH63	~1999999	600
19	085-10301-10	VINYL PIPE	1		~1999999	600
20	206-75501-01	CLAMP, compl.	2		~1999999	600
21	263-66201-A3	GASKET, carburetor	1		~1999999	600
22	248-62201-00	FUEL PUMP AY	1	Includes items -2 thru -16	~1999999	600
-2	251-62200-08	DIAPHRAGM	1		~1999999	600
-4	251-62250-08	SCREW	4		~1999999	600
-12	251-62201-08	DIAPHRAGM	1		~1999999	600
-13	251-62240-08	GASKET	2		~1999999	600
-16	251-62235-08	GASKET	1		~1999999	600
23	263-65002-A3	BRACKET, fuel pump	1		~1999999	600
24	263-62653-B1	PULSE PIPE CP	1		~1999999	600
25	263-68008-B3	RUBBER PIPE	1		~1999999	600
26	263-68501-03	HOSE CLAMP	2		~1999999	600
27	263-65011-A3	FLANGE BOLT	1		~1999999	600
28	X11-00801-10	FLANGE BOLT	2		~1999999	600
29	X11-00601-40	FLANGE BOLT	4		~1999999	600
30	X11-00600-20	FLANGE BOLT	5		~1999999	600
31	263-65011-A0	FUEL FILTER AY	1		~1999999	600
32	263-62612-B1	FUEL PIPE CP	1		~1999999	600
33	263-68007-B3	RUBBER PIPE	1		~1999999	600
34	263-68501-03	HOSE CLAMP	2		~1999999	600

FIG. 600

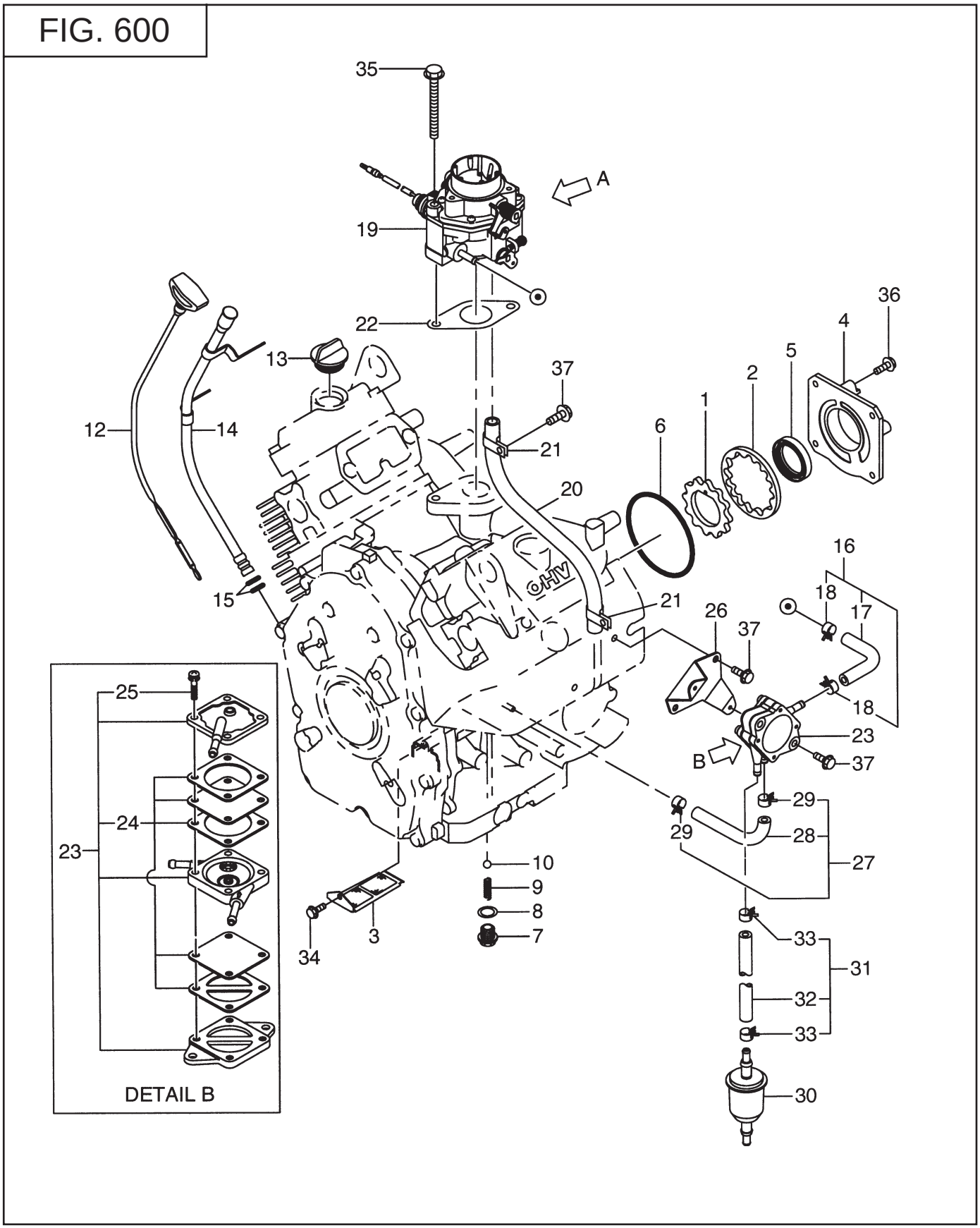
35
A
19
22
36
4
5
2
1
6
13
37
12
14
21
20
16
18
17
15
21
26
37
25
18
23
B
37
24
29
29
28
23
27
10
9
8
7
3
34
33
31
32
33
30
DETAIL B

SECTION 6 FUEL and LUBRICATION GROUP - New Type

REF.	PART NO.	DESCRIPTION	QTY.	REMARKS	FROM-TO	FIG.
1	263-63901-03	INNER ROTOR	1		2000001~	610
2	263-63902-03	OUTER ROTOR	1		2000001~	610
3	263-64302-02	OIL PUMP FILTER UNIT	1		2000001~	610
*4	263-64001-A1	OIL PUMP COVER, compl.	1	Includes item 5	2000001~	610
5	044-03501-70	OIL SEAL	1		2000001~	610
6	X24-08900-30	O RING	1		2000001~	610
7	263-65001-13	PLUG, oil relief	1		2000001~	610
8	003-70140-00	GASKET, aluminum	1		2000001~	610
9	248-65601-03	SPRING, relief valve	1		2000001~	610
10	006-90308-00	STEEL BALL	1		2000001~	610
12	263-63604-11	OIL GAUGE, compl.	1		2000001~	610
13	280-63602-A1	OIL FILTER CAP, compl.	1		2000001~	610
14	263-63622-01	GAUGE, compl.	1		2000001~	610
15	024-01000-10	O RING	2		2000001~	610
*16	263-62606-B1	FUEL PIPE, compl.	1	Includes items 15 and 16	2000001~	610
17	263-68006-B3	RUBBER PIPE (1/4”× 1/2”)	1		2000001~	610
18	263-68501-03	HOSE CLAMP	2		2000001~	610
19	263-62581-10	CARBURETOR AY	1	EH63	2000001~	610
	263-62481-10	CARBURETOR AY	1	EH64	2000001~	610
	263-62381-10	CARBURETOR AY	1	EH65	2000001~	610
	280-62301-30	CARBURETOR AY	1	EH72	2000001~	610
20	085-10301-10	VINYL PIPE	1		2000001~	610
21	206-75501-01	CLAMP, compl.	2		2000001~	610
22	263-66201-A3	GASKET, carburetor	1		2000001~	610
*23	267-62201-10	FUEL PUMP AY	1	Includes items 23 and 25	2000001~	610
26	263-65002-A3	BRACKET, fuel pump	1		2000001~	610
*27	263-62653-B1	PULES PIPE, compl.	1	Includes items 28 and 29	2000001~	610
28	263-68008-B3	RUBBER PIPE (1/4”× 1/2”)	1		2000001~	610
29	263-68501-03	HOSE CLAMP	2		2000001~	610
30	263-65012-A3	FUEL FILTER	1		2000001~	610
*31	263-62612-B1	FUEL PIPE, compl.	1	Includes items 32 and 33	2000001~	610
32	263-68007-B3	RUBBER PIPE (1/4”× 1/2”)	1		2000001~	610
33	263-68501-03	HOSE CLAMP	2		2000001~	610
34	263-65011-A3	FLANGE BOLT (10-32UNF-2A)	1		2000001~	610
35	X11-00801-10	FLANGE BOLT (M8×80mm)	2		2000001~	610
36	X11-00600-30	FLANGE BOLT (M6×14mm)	4		2000001~	610
37	X11-00600-20	FLANGE BOLT (M6×12mm)	5		2000001~	610

FIG. 700

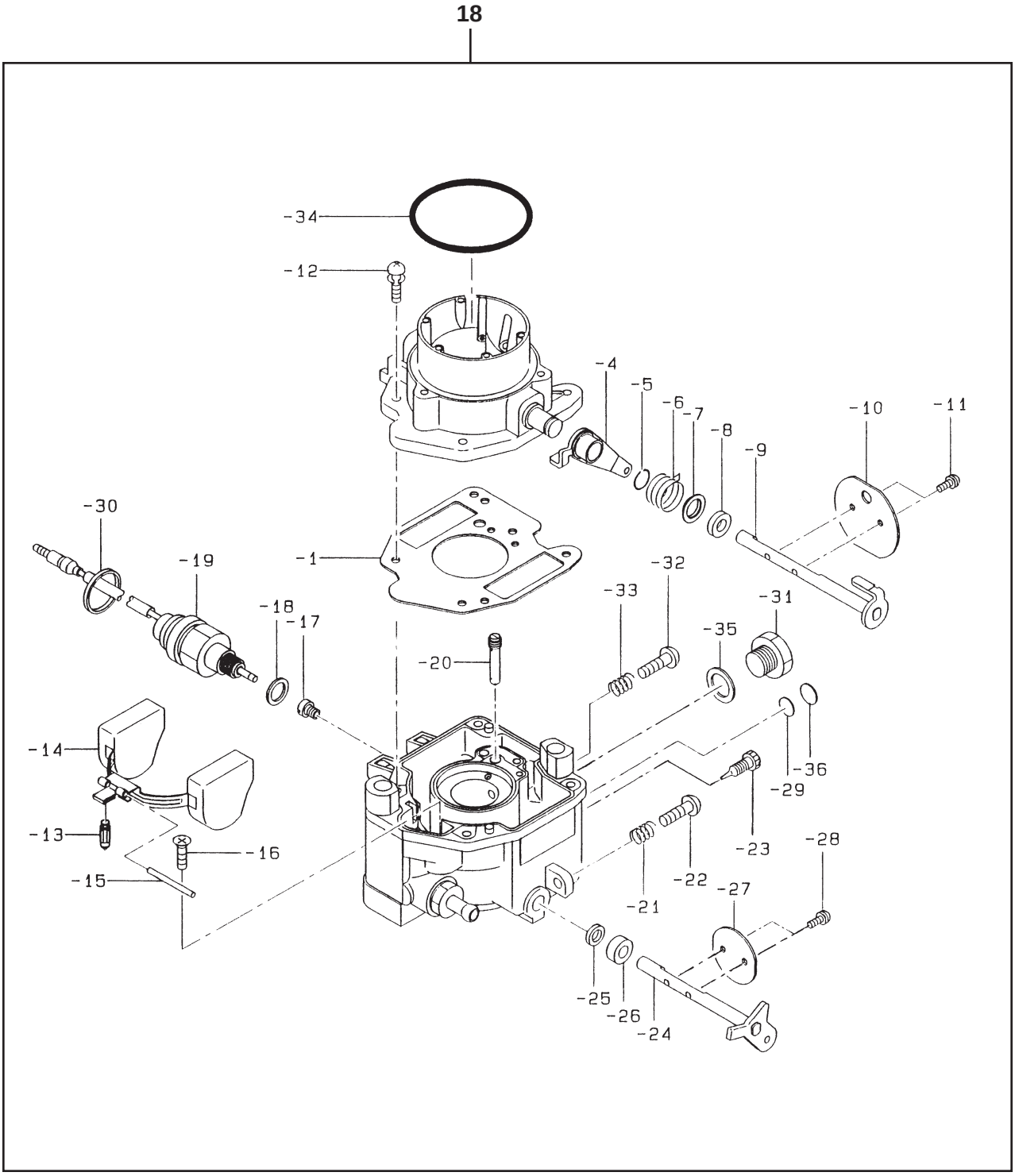
18
-34
-12
-4
-5
-6
-7
-8
-9
-10
-11
-30
-19
-1
-32
-33
-31
-18
-17
-35
-20
-14
-36
-29
-13
-16
-23
-28
-15
-22
-27
-21
-25
-26
-24

REF.	PART NO.	DESCRIPTION	QTY.	REMARKS	FROM-TO	FIG.
18	263-62303-00	CARBURETOR AY, for EH65	1	Includes items -1 thru -36	~1999999	700
	263-62403-00	CARBURETOR AY, for EH64	1	Includes items -1 thru -36	~1999999	700
	263-62503-00	CARBURETOR AY, for EH 63	1	Includes items -1 thru -36	~1999999	700
-1	258-62545-08	GASKET, air horn	1		~1999999	700
-4	263-62524-08	LEVER AY, choke	1		~1999999	700
-5	258-62551-08	RING, choke lever	1		~1999999	700
-6	263-62445-08	SPRING, choke	1		~1999999	700
-7	258-62553-08	COLLAR, choke	1		~1999999	700
-8	258-62554-08	FILTER, choke shaft	1		~1999999	700
-9	263-62520-08	SHAFT AY, choke	1		~1999999	700
-10	258-62525-08	CHOKE VALVE	1		~1999999	700
-11	258-62555-08	SCREW, valve set	2		~1999999	700
-12	258-62450-08	SCREW, air horn set	4		~1999999	700
-13	226-62501-08	VALVE, float	1		~1999999	700
-14	258-62505-08	FLOAT AY	1		~1999999	700
-15	258-62515-08	FLOAT PIN	1		~1999999	700
-16	258-62556-08	SCREW, float pin set	1		~1999999	700
-17	263-62400-08	MAIN JET #132	1		~1999999	700
-18	258-62546-08	GASKET	1		~1999999	700
-19	258-62557-18	SOLENOID VALVE AY	1		~1999999	700
-20	258-62420-08	SLOW JET #60	1		~1999999	700
-21	258-62445-08	SPRING, adjust screw	1		~1999999	700
-22	258-62451-08	SCREW, throttle adjust	1		~1999999	700
-23	261-62435-08	NEEDLE, idle adjust	1		~1999999	700
-24	263-62532-08	THROTTLE SHAFT AY	1	EH63	~1999999	700
	263-62531-08	THROTTLE SHAFT AY	1	EH64	~1999999	700
	263-62530-08	THROTTLE SHAFT AY	1	EH65	~1999999	700
-25	226-62580-08	FILTER, throttle shaft	1		~1999999	700
-26	258-62570-08	COLLAR	1		~1999999	700
-27	263-62535-08	THROTTLE VALVE	1		~1999999	700
-28	261-62352-08	VALVE SET SCREW	2	M3 X 5mm	~1999999	700
-29	258-62560-08	EXPANSION PLUG	1		~1999999	700
-30	258-62566-08	CLAMP, solenoid	1		~1999999	700
-31	263-62551-08	PLUG	1		~1999999	700
-32	215-62353-08	SCREW	1		~1999999	700
-33	215-62446-08	SPRING	1		~1999999	700
-34	263-62560-08	O RING	1		~1999999	700
-35	263-62555-08	GASKET	1		~1999999	700
-36	263-62570-08	PLUG, anti tamper	1		~1999999	700

FIG. 700

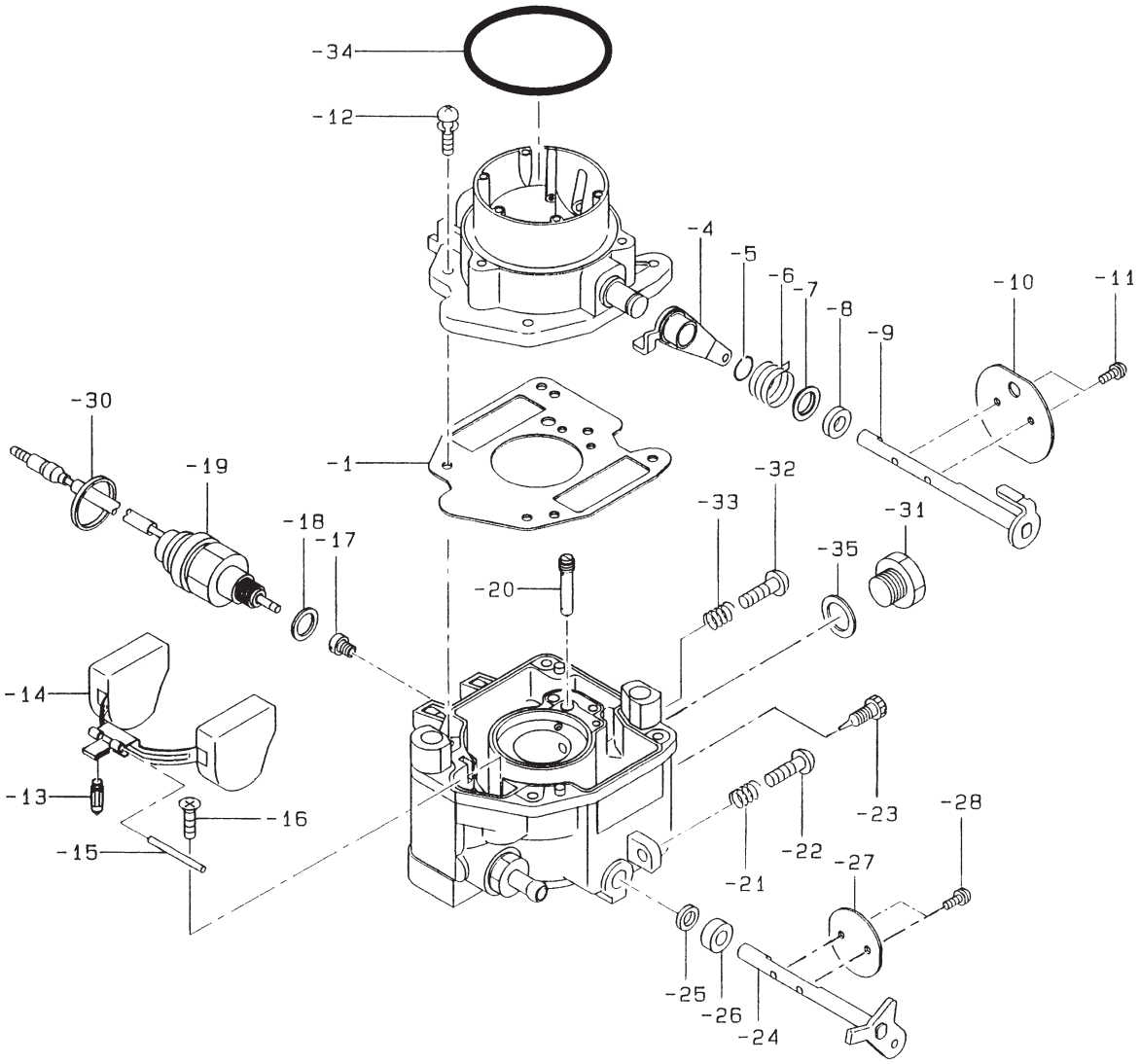
-34
-12
-4
-5
-6
-7
-8
-9
-10
-11
-30
-19
-1
-32
-33
-31
-18
-17
-35
-20
-14
-13
-16
-15
-23
-28
-22
-21
-27
-25
-26
-24

REF.	PART NO.	DESCRIPTION	QTY.	REMARKS	FROM-TO	FIG.
18	263-62581-10	CARBURETOR AY, for EH63	1	Includes items -1 thru -36	2000001~	700
	263-62481-10	CARBURETOR AY, for EH64	1	Includes items -1 thru -36	2000001~	700
	263-62381-10	CARBURETOR AY, for EH 65	1	Includes items -1 thru -36	2000001~	700
-1	280-62545-08	GASKET, air horn	1		2000001~	700
-4	263-62524-08	LEVER AY, choke	1		2000001~	700
-5	258-62551-08	RING, choke lever	1		2000001~	700
-6	263-62445-08	SPRING, choke	1		2000001~	700
-7	280-62551-08	COLLAR, choke	1		2000001~	700
-8	258-62554-08	FILTER, choke shaft	1		2000001~	700
-9	263-62520-08	SHAFT AY, choke	1		2000001~	700
-10	263-62528-08	CHOKE VALVE	1		2000001~	700
-11	258-62555-08	SCREW, valve set	2		2000001~	700
-12	258-62450-08	SCREW, air horn set	4		2000001~	700
-13	226-62501-08	VALVE, float	1		2000001~	700
-14	280-62505-08	FLOAT AY	1		2000001~	700
-15	258-62515-08	FLOAT PIN	1		2000001~	700
-16	258-62556-08	SCREW, float pin set	1		2000001~	700
-17	263-62400-08	MAIN JET #132	1		2000001~	700
-18	258-62546-08	GASKET	1		2000001~	700
-19	263-62556-08	SOLENOID VALVE AY	1		2000001~	700
-20	258-62420-08	SLOW JET #60	1		2000001~	700
-21	258-62445-08	SPRING, adjust screw	1		2000001~	700
-22	263-62451-08	SCREW, throttle adjust	1		2000001~	700
-23	261-62435-08	NEEDLE, idle adjust	1		2000001~	700
-24	263-62532-08	THROTTLE SHAFT AY	1	EH65	2000001~	700
	263-62531-08	THROTTLE SHAFT AY	1	EH64	2000001~	700
	263-62530-08	THROTTLE SHAFT AY	1	EH63	2000001~	700
-25	226-62580-08	FILTER, throttle shaft	1		2000001~	700
-26	258-62570-08	COLLAR	1		2000001~	700
-27	263-62535-08	THROTTLE VALVE	1		2000001~	700
-28	261-62352-08	VALVE SET SCREW	2	M3 X 5mm	2000001~	700
-30	258-62566-08	CLAMP, solenoid	1		2000001~	700
-31	263-62552-08	PLUG	1		2000001~	700
-32	215-62353-08	SCREW	1		2000001~	700
-33	215-62446-08	SPRING	1		2000001~	700
-34	263-62560-08	O RING	1		2000001~	700
-35	263-62555-08	GASKET	1		2000001~	700

FIG. 710

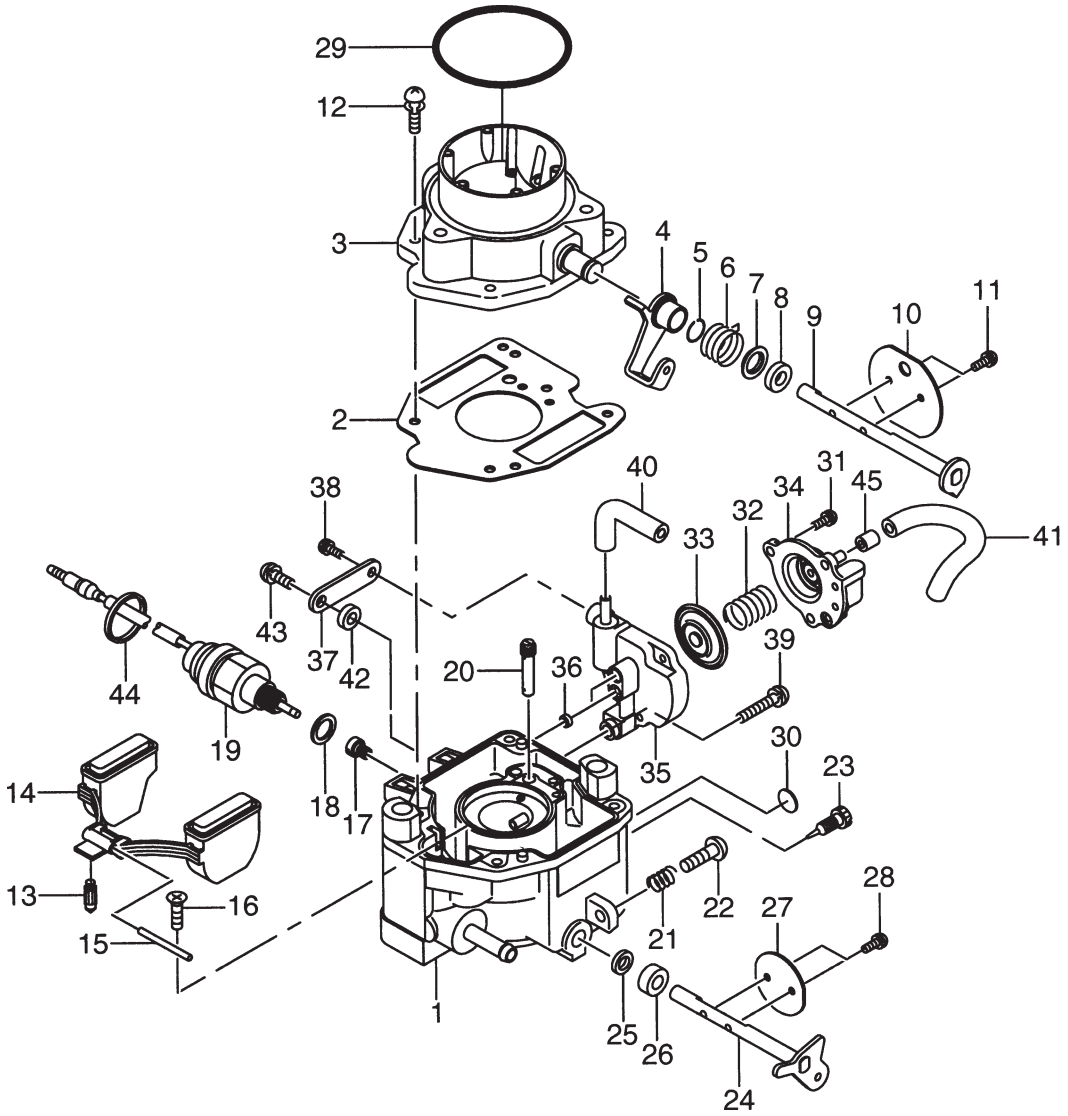
29
12
3
4
5
6
7
8
9
10
11
2
40
31
45
38
34
32
41
33
43
37
42
39
44
20
36
19
30
35
23
14
18
17
13
16
22
28
27
21
15
1
25
26
24

REF.	PART NO.	DESCRIPTION	QTY.	REMARKS	FROM-TO	FIG.
*1	280-62301-30	CARBURETOR AY	1	Includes items 2 thru 45		710
2	280-62545-08	GASKET, air horn	1			710
4	263-62524-08	LEVER AY, choke	1			710
5	258-62551-08	RING, choke lever	1			710
6	263-62445-08	SPRING, choke	1			710
7	280-62550-08	COLLAR, choke	1			710
8	258-62554-08	FILTER, choke shaft	1			710
9	263-62520-08	SHAFT ASS'Y, choke	1			710
10	258-62525-08	CHOKE VALVE	1			710
11	258-62555-08	SCREW, valve set	2			710
12	258-62450-08	SCREW, air horn set	4			710
13	226-62501-08	VALVE, float	1			710
14	280-62505-08	FLOAT AY	1			710
15	258-62515-08	FLOAT PIN	1			710
16	258-62556-08	SCREW, float pin set	1			710
17	280-62400-08	MAIN JET (#138)	1			710
18	258-62546-08	GASKET	1			710
19	258-62557-08	SOLENOID VALVE AY	1			710
20	280-62421-08	JET, slow (#48)	1			710
21	258-62445-08	SPRING, adjust screw	1			710
22	258-62451-08	SCREW, throttle adjust	1			710
23	261-62435-08	NEEDLE, idle adjust	1			710
24	280-62530-08	THROTTLE SHAFT AY	1			710
25	226-62580-08	FILTER, throttle shaft	1			710
26	258-62570-08	COLLAR	1			710
27	263-62535-08	THROTTLE VALVE	1			710
28	261-62352-08	VALVE SET SCREW (M3×5mm)	2			710
29	263-62560-08	O RING	1			710
30	261-62358-08	PLUG, ANTI TAMPER	1			710
31	280-62586-08	SCREW and WASHER AY	3			710
32	280-62320-08	SPRING	1			710
33	280-62358-08	DIAPHRAGM AY	1			710
34	280-62359-08	COVER AY	1			710
35	280-62360-08	BODY AY	1			710
36	280-62355-08	U RING	2			710
37	280-62589-08	HOLDER	1			710
38	280-62586-08	SCREW and WASHER AY	1			710
39	280-62587-08	SCREW, body set	1			710
40	280-62356-08	PIPE, connector	1			710
41	280-62357-08	PIPE, connector	1			710
42	280-62588-08	SPACER	1			710
43	280-62585-08	SCREW, holder set	1			710
44	258-62566-08	CLAMP, SOLENOID WIRE	1			710
45	280-62450-08	JET	1			710

FIG. 800

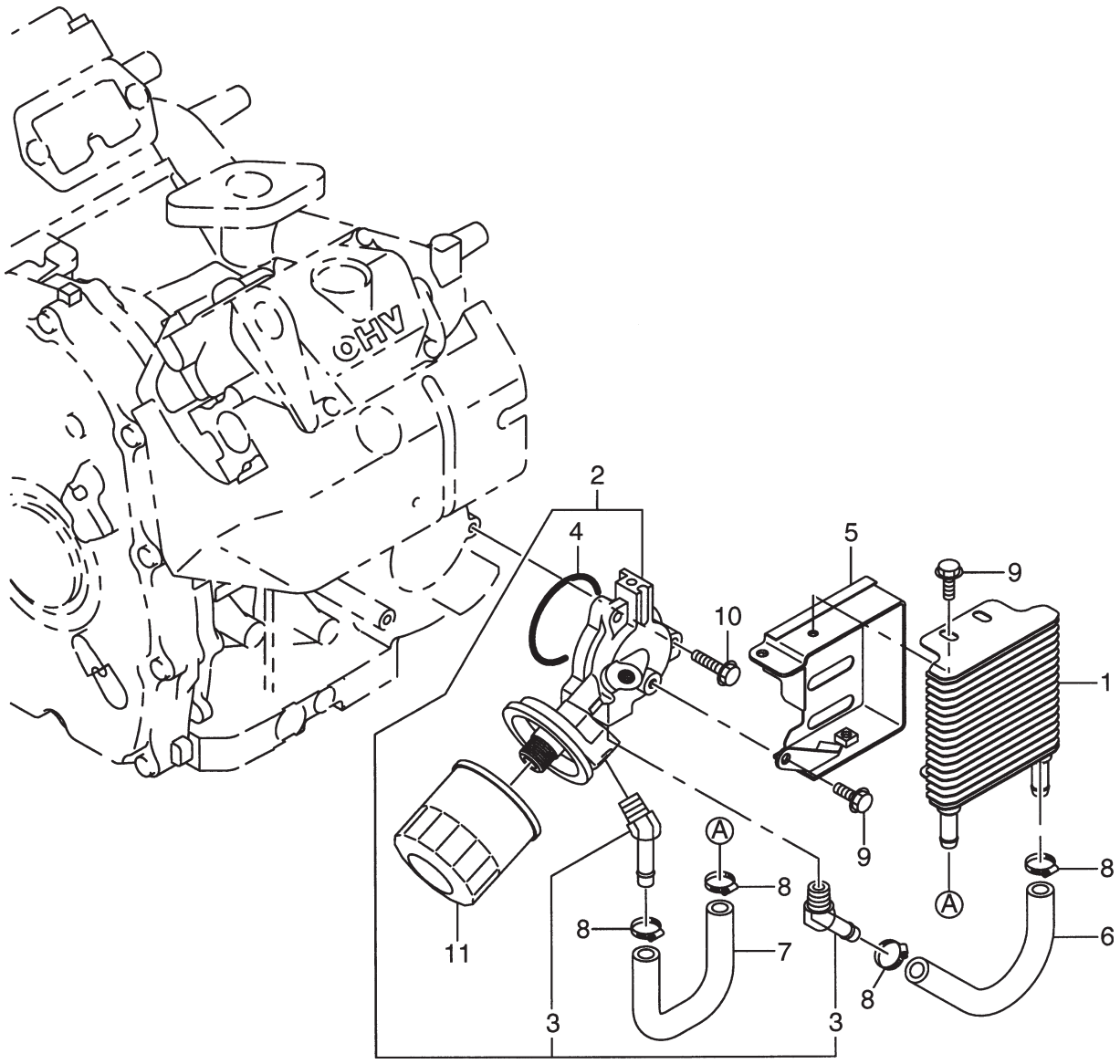

SECTION 8 OIL COOLER and OIL FILTER GROUP - EH72

REF.	PART NO.	DESCRIPTION	QTY.	REMARKS	FROM-TO	FIG.
1	280-65001-B1	OIL COOLER, compl.	1			800
*2	280-65011-A1	ADAPTER, oil cooler,. cp.	1	Includes item 3		800
3	280-65025-A3	ELBOW ADAPTER 1	2			800
4	280-65050-A3	O RING	1			800
5	280-65030-12	BRACKET UNIT, oil cooler	1			800
6	280-65035-B3	HOSE 1, oil cooler	1			800
7	280-65036-B3	HOSE 2, oil cooler	1			800
8	056-11501-00	HOSE CLAMP	4			800
9	X11-00600-20	FLANGE BOLT	4			800
10	X11-00601-01	FLANGE BOLT	3			800
11	248-65801-00	OIL FILTER AY	1			800

FIG. 900

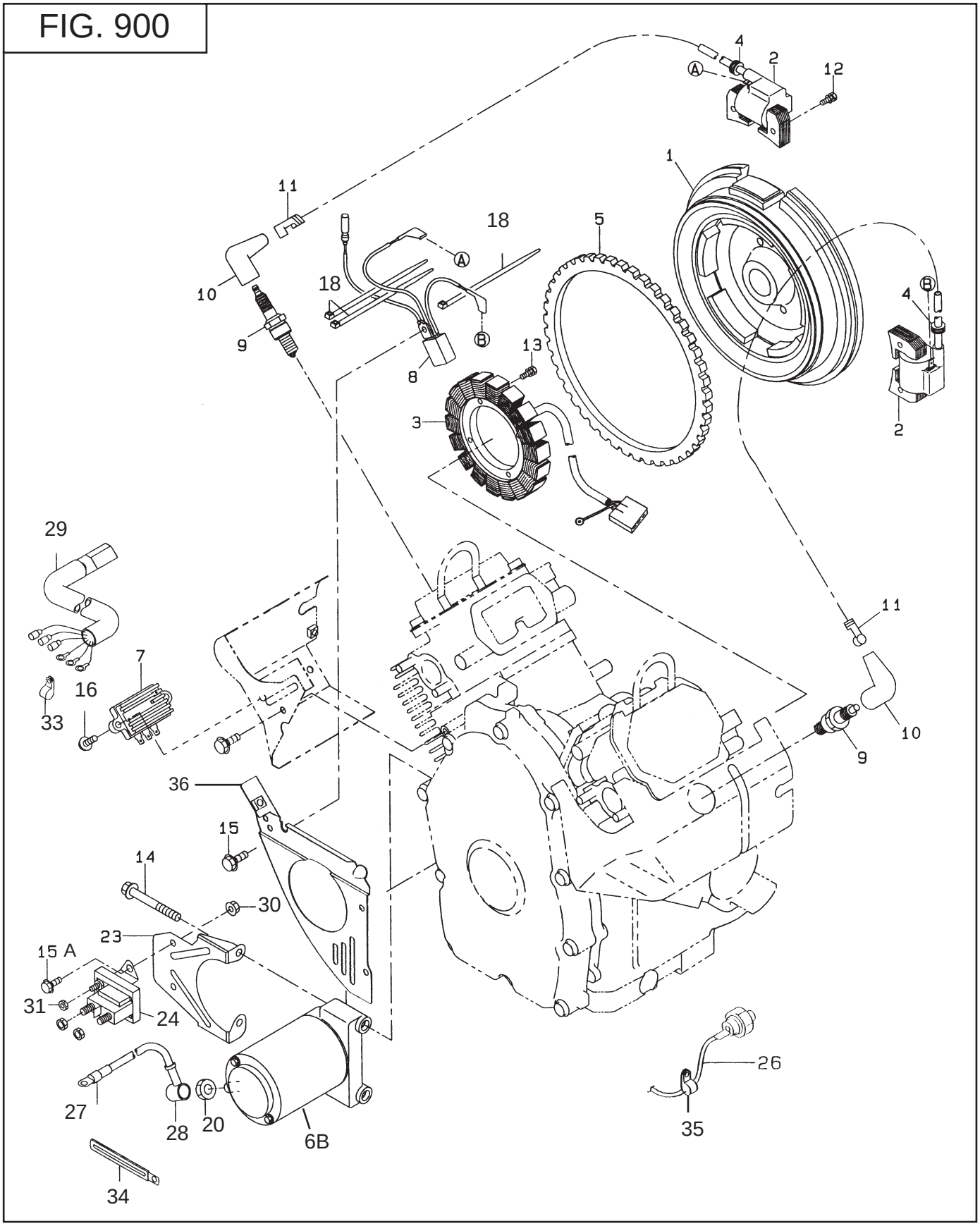
4
2
12
A
1
11
18
5
A
10
18
B
4
B
9
13
8
3
2
29
11
7
16
33
10
9
36
15
14
30
23
15 A
31
24
26
27
28
20
6B
35
34

SECTION 9 ELECTRIC DEVICE GROUP - OLD STYLE

REF.	PART NO.	DESCRIPTION	QTY.	REMARKS	FROM-TO	FIG.
1	263-77202-01	FLYWHEEL, compl.	1	Requires Cooling Blower (Fig 5 # 11)		900
	263-77202-01	FLYWHEEL, compl.	1		To 4322	900
2	263-78201-01	IGNITION COIL, compl.	2			900
3	263-79401-01	CHARGE COIL, compl	1		To 4322	900
4	246-79501-03	GROMMET	2			900
5	263-71001-03	RING GEAR	1			900
6B	263-70501-00	STARTING MOTOR	1	Obsolete, use 263-70502-A0	To 4322	900
7	263-71901-01	REGULATOR, compl.	1			900
8	KU3-11052-01	STOP DIODE, compl.	1			900
9	X65-01403-00	SPARK PLUG	2	NGK (BP-6ES)		900
	065-01414-40	SPARK PLUG	2	CHAMPION (N9YC)		900
10	X65-51000-10	SPARK PLUG CAP	2			900
11	X65-91000-10	PLUG TERMINAL	2			900
12	001-14063-00	BOLT and WASHER AY	4			900
13	X13-10500-40	SCREW and WASHER AY	4			900
14	X11-00801-00	FLANGE BOLT	2			900
15	X11-00600-10	FLANGE BOLT	1			900
15A	X11-00600-20	FLANGE BOLT	2			900
16	X11-00601-40	FLANGE BOLT	2			900
18	X56-30000-80	WIRE BAND	3			900
20	X17-10600-10	NUT	1		To 4352	900
23	263-77001-A1	BRACKET, magnetic switch	1		To 4352	900
26	263-73102-01	WIRE AY, oil pressure switch	1			900
27	224-73201-01	WIRE 20, compl.	1		To 4352	900
28	214-78501-03	WIRE CASING	2		To 4352	900
29	263-73101-01	WIRING HARNESS	1		To 4352	900
30	002-38060-00	FLANGE NUT	2		To 4352	900
31	X17-60400-10	LOCK NUT	1		To 4352	900
33	206-75501-01	CLAMP	1			900
34	056-60002-50	CLAMP	1			900
35	214-79006-01	CLAMP	1			900
36	263-52901-02	CYLINDER BAFFLE	1	For original starter	To 4352	900

FIG. 910

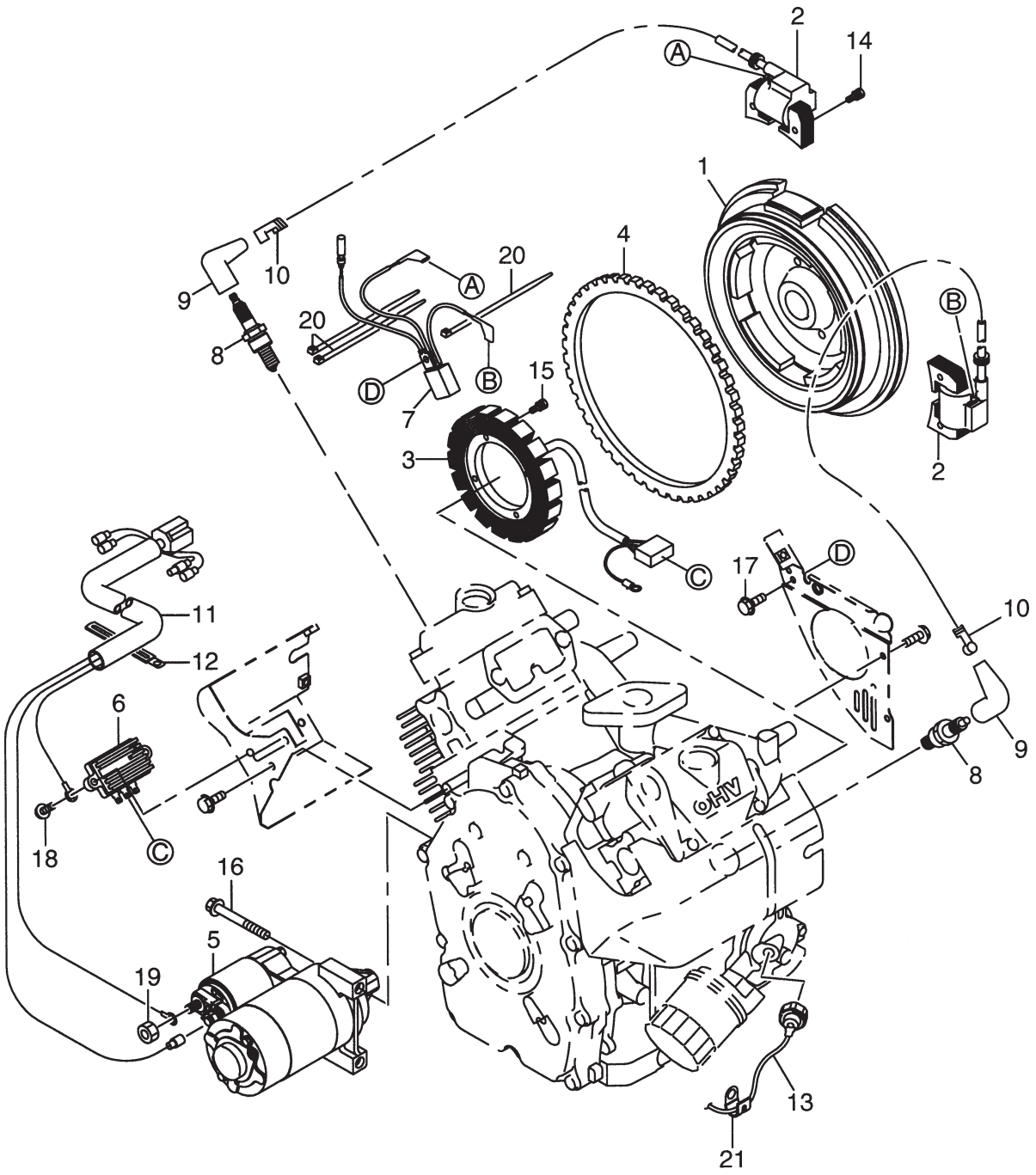

SECTION 9 ELECTRIC DEVICE GROUP - NEW STYLE

REF.	PART NO.	DESCRIPTION	QTY.	REMARKS	FROM-TO	FIG.
1	263-77203-11	FLYWHEEL, compl.	1		From4323	910
2	263-78201-11	IGNITION COIL, compl.	2			910
3	263-79411-A1	CHARGE COIL, compl.	1		From 4323	910
4	263-71001-03	RING GEAR	1			910
5	263-70502-A0	STARTING MOTOR	1		From 4323	910
6	263-71901-01	REGULATOR, compl.	1			910
7	KU3-11052-21	STOP DIODE, compl.	1			910
8	X65-01407-30	SPARK PLUG	2	NGK (BP-6ES) EH63,EH64,EH65		910
8	065-01414-40	SPARK PLUG	2	CHAMPION(N9YC)EH63,EH64,EH65		910
8	X65-01404-80	SPARK PLUG	2	NGK (BPR-5ES) EH72		910
9	X65-51000-10	SPARK PLUG CAP	2			910
10	X65-91000-10	PLUG TERMINAL	2			910
11	280-73101-A1	WIRING HARNESS	1		From 4323	910
12	056-60002-50	CLAMP	1			910
13	263-73102-A1	WIRE AY, oil pressure switch	1			910
14	001-14062-50	BOLT and WASHER AY	4			910
15	X13-10500-40	SCREW and WASHER AY	4			910
16	X11-00801-00	FLANGE BOLT	2			910
17	X11-00600-10	FLANGE BOLT	1			910
18	X11-00601-40	FLANGE BOLT	2			910
19	002-38080-00	FLANGE NUT	1		From 4353	910
20	X56-30000-80	WIRE BAND	3			910
20	002-38080-00	FLANGE NUT	1		From 4353	910
21	206-75501-01	CLAMP	1			910

FIG. 1000

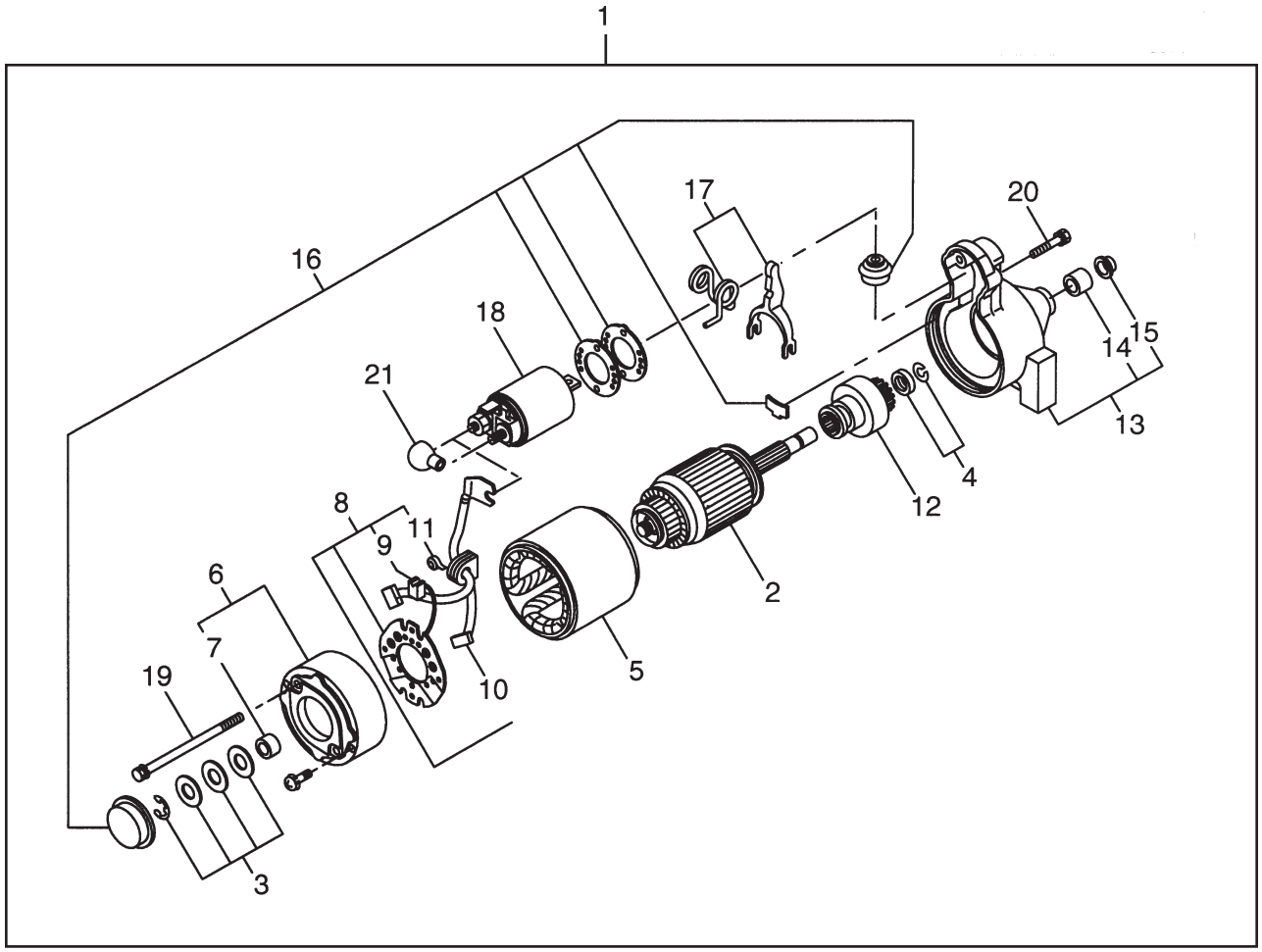

SECTION 10 STARTING MOTOR GROUP - NEW STYLE (HITACHI)

REF.	PART NO.	DESCRIPTION	QTY.	REMARKS	FROM-TO	FIG.
1	263-70502-A0	STARTING MOTOR AY	1	Includes items 1thru 21		1000
2	263-70510-08	ARMATURE AY	1			1000
3	263-70550-08	THRUST WASHER KIT	1			1000
4	210-70534-08	PINION STOPPER SET	1			1000
5	255-70580-08	YOKE AY	1			1000
*6	263-70505-08	REAR COVER AY	1	Includes item 7		1000
*8	255-70531-08	BRUSH HOLDER AY	1	Includes items 9 thru 11		1000
9	228-70514-08	BRUSH (-)	2			1000
10	255-70551-08	BRUSH SET	1			1000
11	228-70516-08	BRUSH SPRING	4			1000
12	255-70521-08	PINION AY	1			1000
*13	263-70500-08	GEAR COVER AY	1	Includes items 14 and 15		1000
16	255-70570-08	DUST COVER KIT	1			1000
17	243-70525-08	SHIFT LEVER KIT	1			1000
18	263-70515-08	MAGNETIC SWITCH AY	1			1000
19	207-70524-08	THROUGH BOLT	2			1000
20	263-70551-08	BOLT	2			1000
21	207-70526-08	RUBBER CAP	1			1000

FIG. 1100

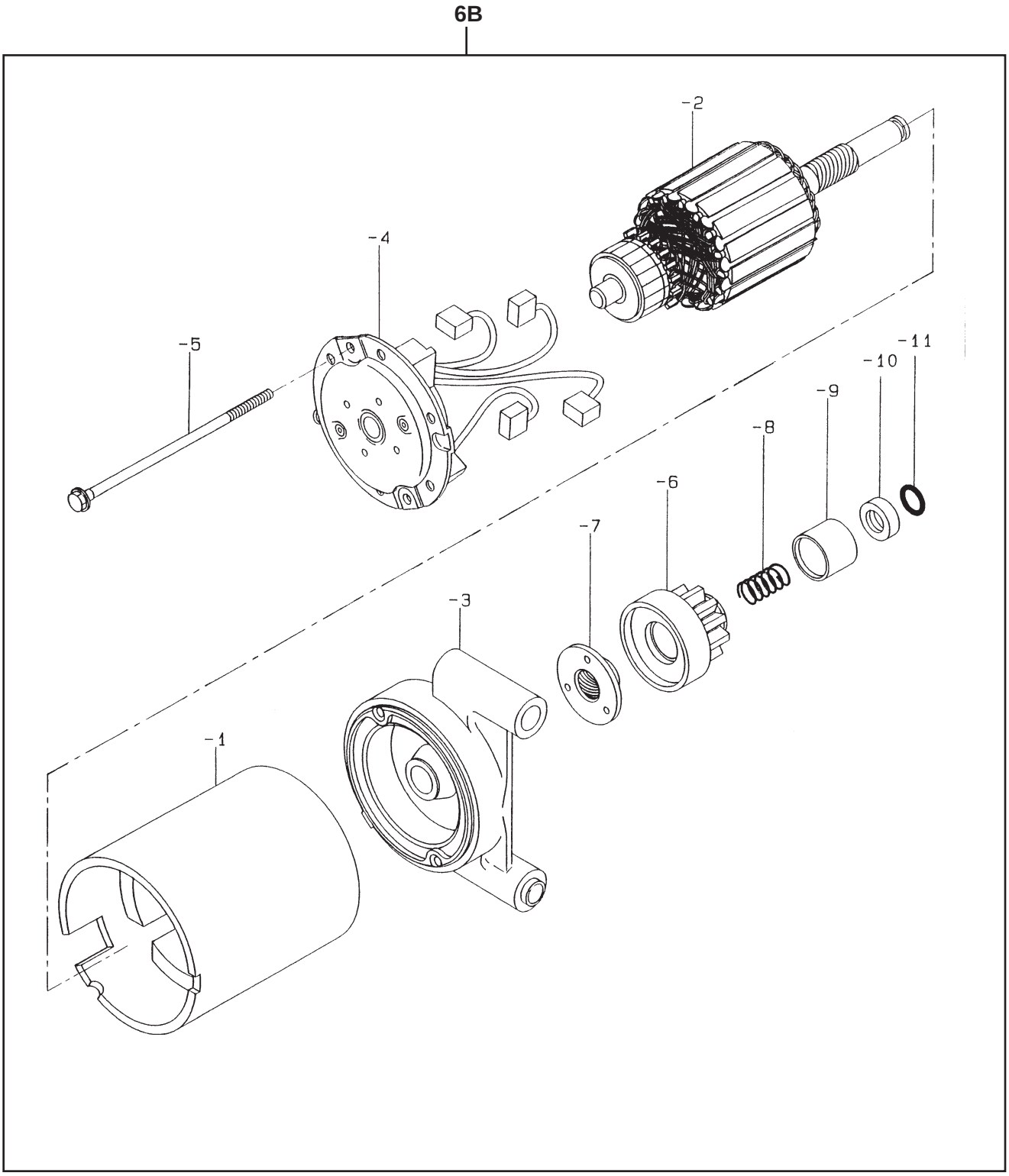

SECTION 11 STARTING MOTOR GROUP - OLD STYLE

REF.	PART NO.	DESCRIPTION	QTY.	REMARKS	FROM-TO	FIG.
6B	263-70501-00	STARTING MOTOR AY	1	Includes items -1 thru -11		1100
-1	263-70560-08	YOKE AY	1			1100
-2	263-70550-08	ARMATURE AY	1			1100
-3	263-70501-08	END FRAME AY	1			1100
-4	263-70505-08	END FRAME AY	1			1100
-5	263-70575-08	CASE BOLT	2			1100
-6	263-70521-08	PINION AY	1			1100
-7	263-70584-08	NUT	1			1100
-8	263-70585-08	SPRING	1			1100
-9	263-70583-08	DUST COVER	1			1100
-10	263-70581-08	SPRING RETAINER	1			1100
-11	263-70582-08	RETAINER RING	1			1100

FIG. 1200

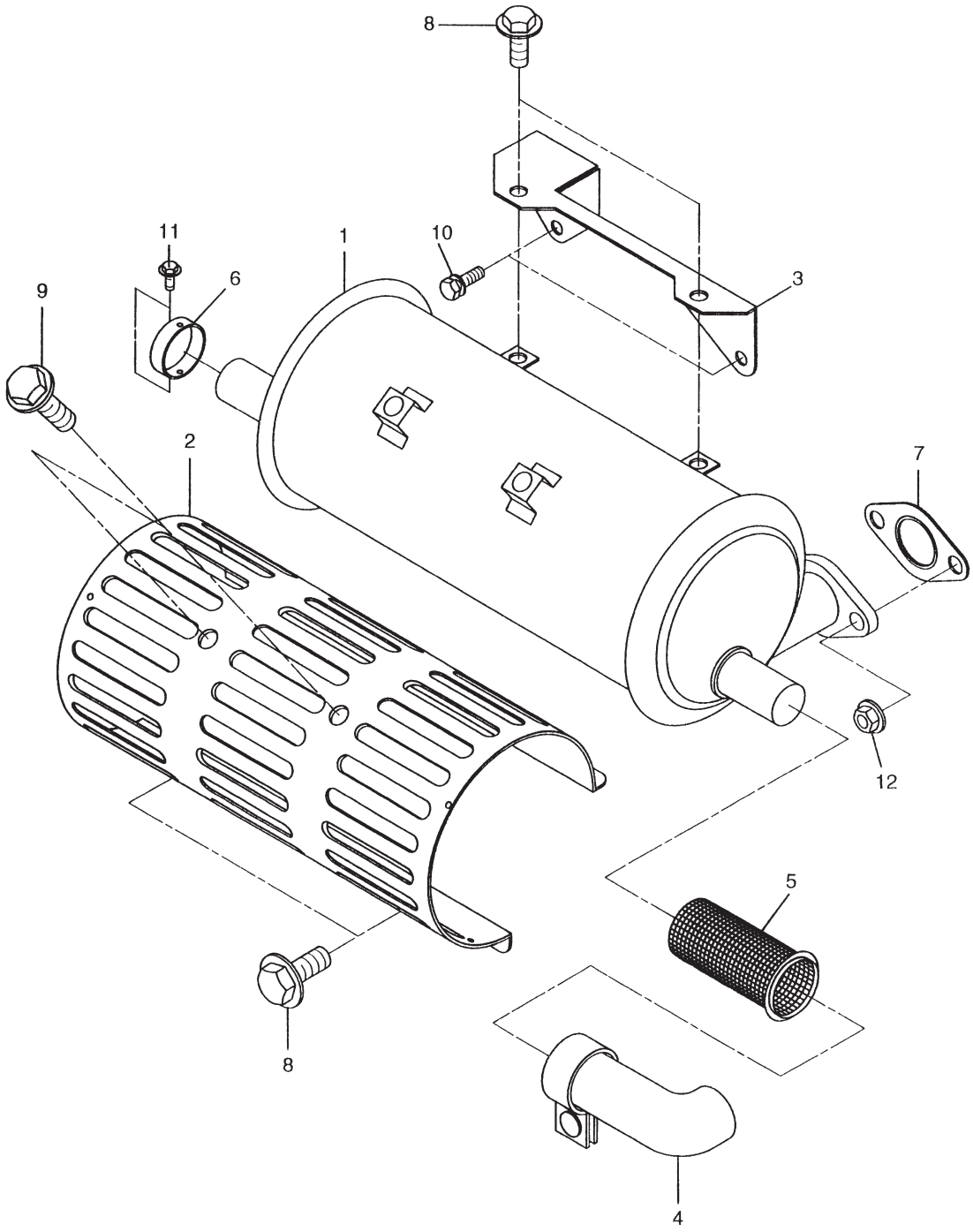

SECTION 12 ACCESSORY - MUFFLER, TOP MOUNT, SIDE OUTLET

REF.	PART NO.	DESCRIPTION	QTY.	REMARKS	FROM-TO	FIG.
*	92630001	Muffler Kit, top mount side outlet	1	Includes items 1 thru 12		1200
1	263-30101-A1	MUFFLER AY	1			1200
2	263-34201-A1	COVER, muffler	1			1200
3	263-37001-A1	BRACKET, muffler	1			1200
4	263-37301-B1	DEFLECTOR AY	1			1200
5	263-37321-A2	SPARK ARRESTER	1			1200
6	263-37341-A1	CAP, exhaust outlet	1			1200
7	263-35201-A1	GASKET, exhaust	2			1200
8	X11-00601-40	FLANGE BOLT	4			1200
9	X11-00600-10	FLANGE BOLT	2			1200
10	001-14082-00	BOLT and WASHER AY	2			1200
11	263-37361-A3	TAPPING SCREW	2			1200
12	X18-00800-10	FLANGE NUT	4			1200

FIG. 1300

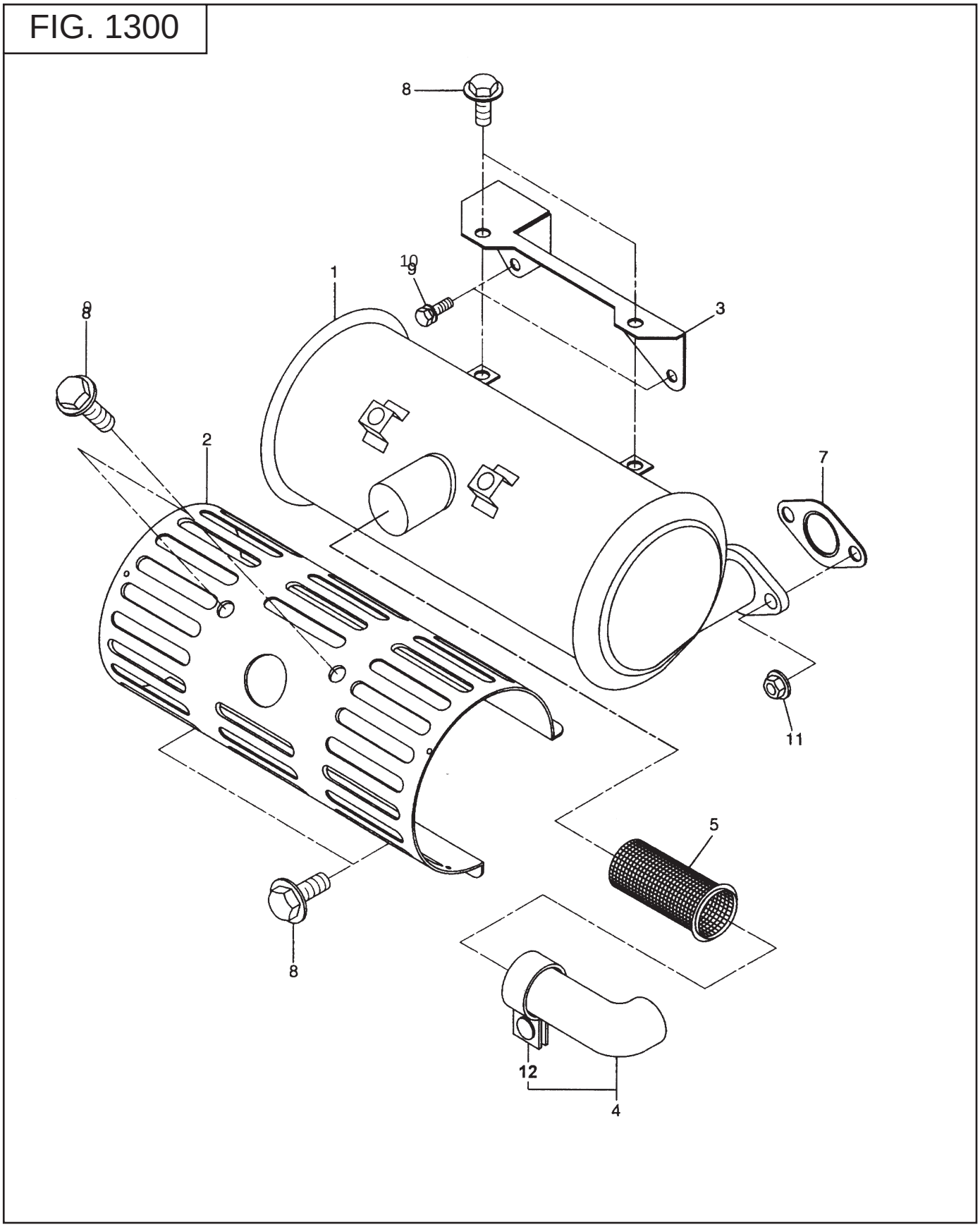

SECTION 13 ACCESSORY - MUFFLER, TOP MOUNT, REAR OUTLET

REF.	PART NO.	DESCRIPTION	QTY.	REMARKS	FROM-TO	FIG.
*	92630005	Muffler Kit, top mount rear outlet	1	Includes items 1-11		1300
1	263-30102-A1	MUFFLER AY	1			1300
2	263-34202-A1	COVER, muffler	1			1300
3	263-37001-A1	BRACKET, muffler	1			1300
4	263-37301-B1	DEFLECTOR AY	1			1300
5	263-37321-A2	SPARK ARRESTER	1			1300
7	263-35201-A1	GASKET, exhaust	2			1300
8	X11-00601-40	FLANGE BOLT	4			1300
9	X11-00600-10	FLANGE BOLT	2			1300
10	001-14082-00	BOLT and WASHER AY	2			1300
11	X18-00800-10	FLANGE NUT	4			1300

FIG. 1400

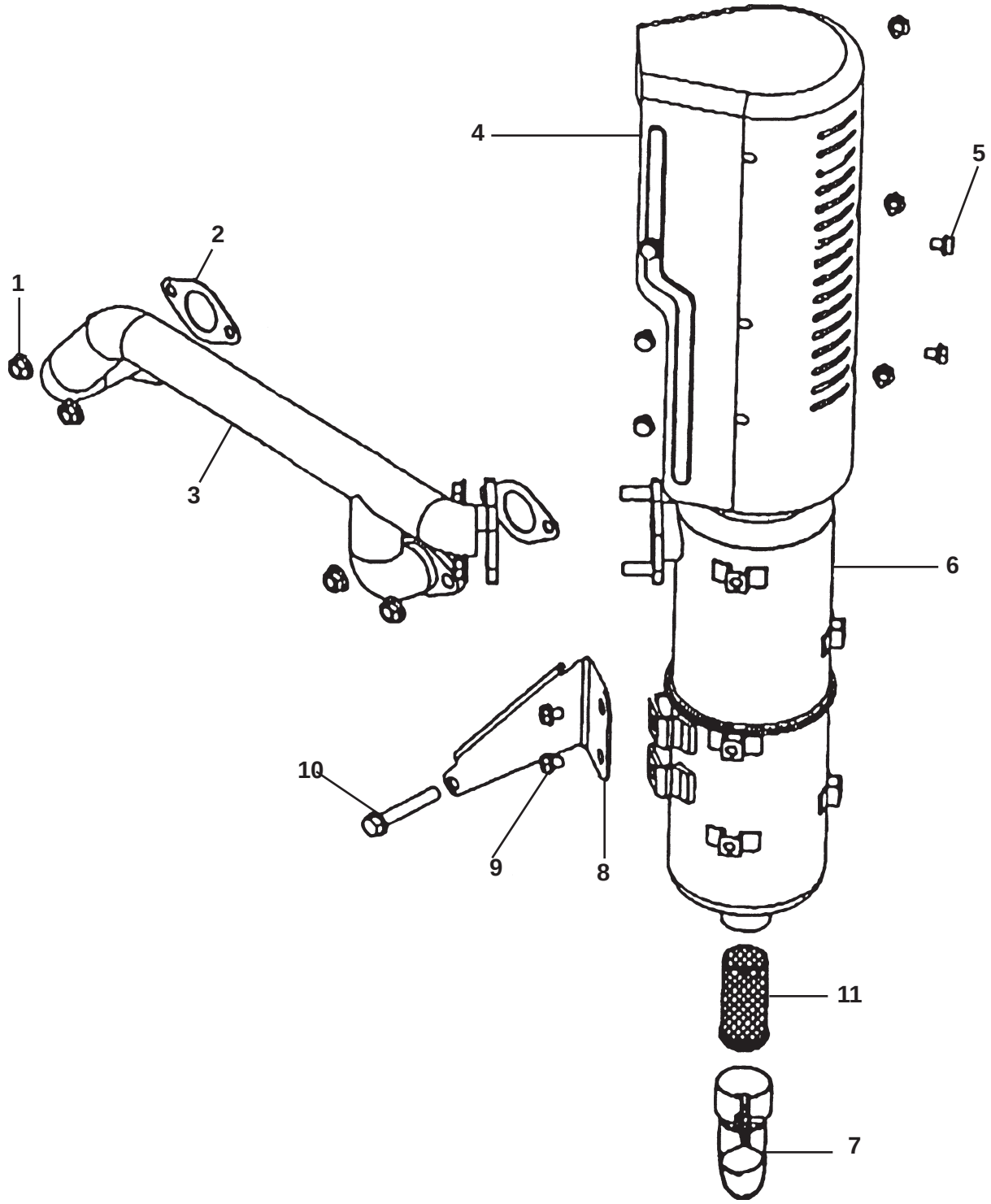

SECTION 14 ACCESSORY - MUFFLER, SIDE MOUNT OIL FILTER SIDE

REF.	PART NO.	DESCRIPTION	QTY.	REMARKS	FROM-TO	FIG.
*	92630004	Muffler Kit, side mount, oil filter side		Includes items 1 thru 11		1400
1	X18-00800-10	FLANGE NUT	6			1400
2	263-35201-A1	GASKET	3			1400
3	263-34101-A1	MANIFOLD	1			1400
4	263-34211-01	MUFFLER COVER	1			1400
5	X11-00600-10	FLANGE BOLT	8			1400
6	263-30201-01	MUFFLER	1			1400
7	263-37301-B1	DEFLECTOR AY	1			1400
8	263-37011-A1	BRACKET	1			1400
9	001-14081-60	BOLT and WASHER AY	2	M8 x 16		1400
10	X11-00800-90	FLANGE BOLT	1	M8 x 50		1400
11	263-37321-A2	SPARK ARRESTOR	1			1400

FIG. 1500

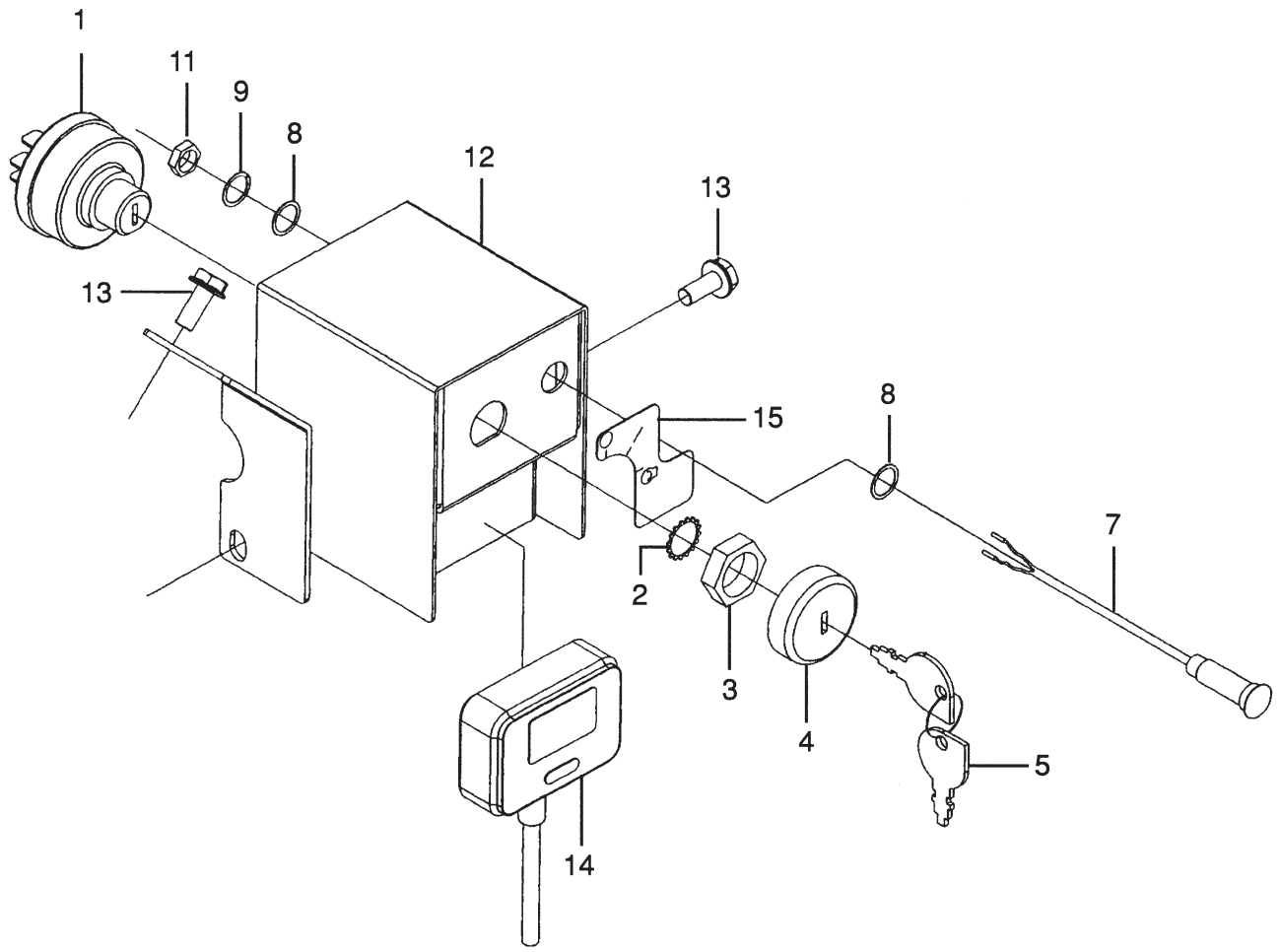

SECTION 15 KEY SWITCH with TACHOMETER/HOUR METER

REF.	PART NO.	DESCRIPTION	QTY.	REMARKS	FROM-TO	FIG.
	92630002	KEY SWITCH Kit,w/tach,hr meter		Includes items 1 thru 12		1500
1	X66-00004-10	KEY SWITCH AY	1	Includes items 2 thru 5		1500
2	**	LOCK WASHER	1			1500
3	**	LOCK NUT, switch	1			1500
4	**	BEZEL, switch	1			1500
5	92630002-1	KEY SET	1	Includes two keys		1500
7	263-77301-00	LIGHT AY	1	Includes items 8 thru 11		1500
8	**	WASHER	2			1500
9	**	LOCK WASHER	1			1500
11	**	LOCK NUT	1			1500
12	263-75111-B1	CONTROL BOX	1			1500
13	X11-00601-40	FLANGE BOLT	2	M6 x 18		1500
14	263-75201-A1	TACH/HOUR METER	1			1500
15	263-95001-A3	LABEL, control box	1			1500

PRINTED IN THE USA